LevelTOW
ADVANCED TOWING SOLUTIONS
by ridetech

81244006 2004-2008 F150 2WD

Congratulations - your new LevelTow Helper Springs are quality products capable of improving the handling and comfort of your vehicle. As with all products, proper installation is the key to obtaining all of the benefits your kit is capable of delivering. Please take a few minutes to read through the instructions to identify the components and learn where and how they are used. It is a good idea to start by comparing the parts in your kit with the parts list below.

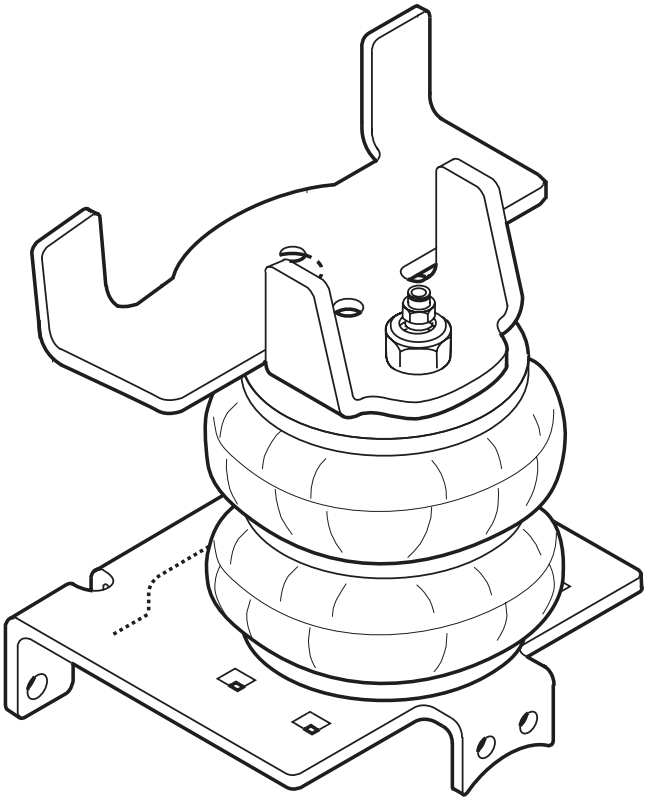

Components

AIR SPRING	6397	2
RIGHT UPPER BRACKET	5409	1
LEFT UPPER BRACKET	5410	1
LOWER BRACKETS	5412	2
LOWER BRACE	5413	2
HEAT SHIELD	0025	1
AXLE STRAP	0530	2

Hardware

3/8”-16 FLANGE LOCK NUT	12
3/8”-16 X 1” HEX HEAD BOLT	4
3/8”-16 X 3/4” HEX HEAD BOLT	2
3/8”-16 x 5 1/2” CARRIAGE BOLTS	4
5/8”-18 NYLON JAM NUT	2
3/8”-16 BAIL CLAMP	2
10mm X 30mm FLAT HEAD ALLEN BOLT	2
5/16” FLAT WASHER	4
THERMAL SLEEVE	2
NYLON TIE	6

WARNING!

Do not inflate this assembly when it is unrestricted. The assembly must be restricted by the suspension or other adequate structure. Do not inflate beyond 100 P.S.I. Improper use or over inflation may cause property damage or severe personal injury.

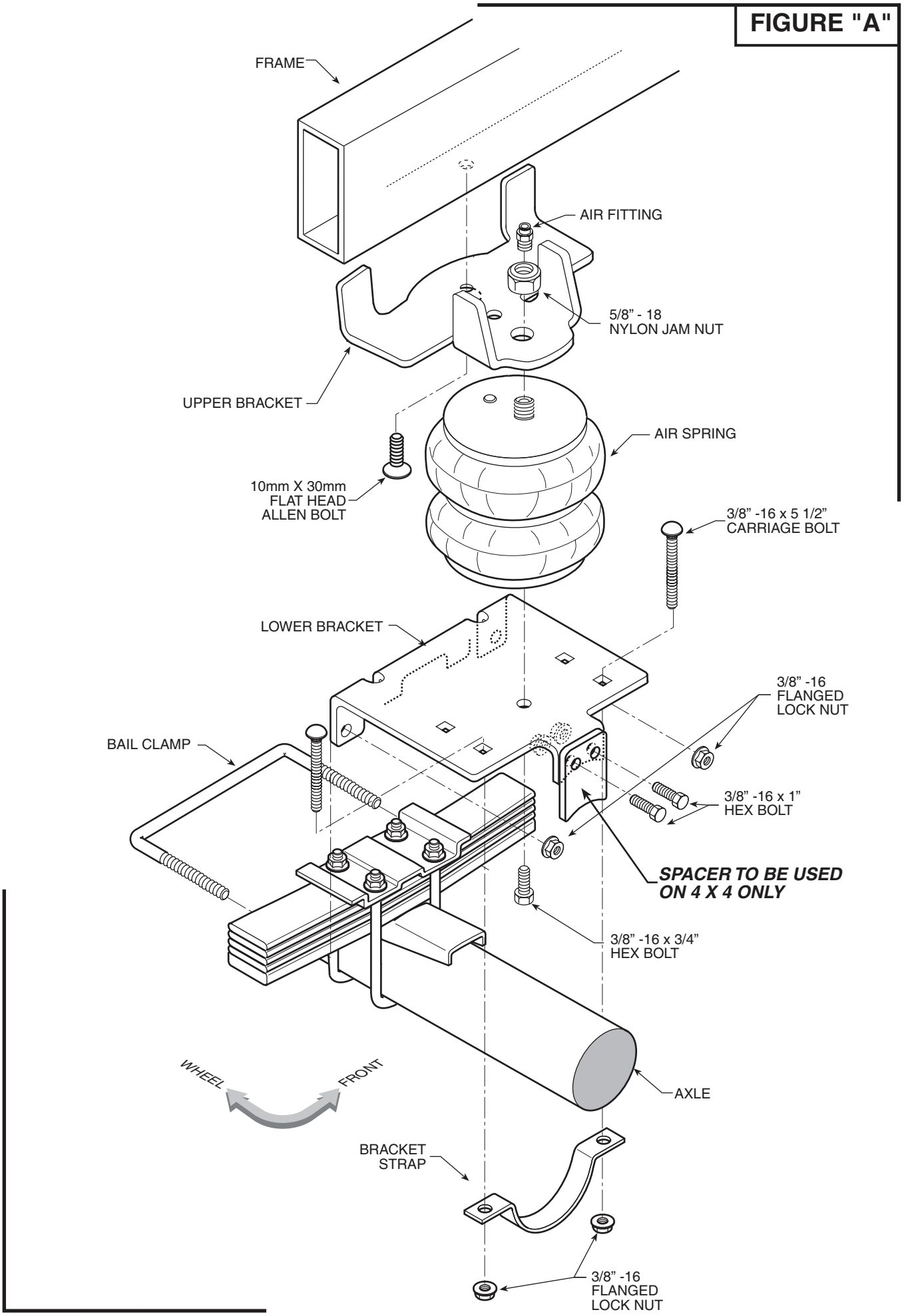
FIGURE "A"
FRAME
AIR FITTING
5/8" - 18
NYLON JAM NUT
UPPER BRACKET
AIR SPRING
10mm X 30mm
FLAT HEAD
ALLEN BOLT
3/8" -16 x 5 1/2"
CARRIAGE BOLT
LOWER BRACKET
3/8" -16
FLANGED
LOCK NUT
BAIL CLAMP
3/8" -16 x 1"
HEX BOLT
SPACER TO BE USED
ON 4 X 4 ONLY
3/8" -16 x 3/4"
HEX BOLT
WHEEL
FRONT
AXLE
BRACKET
STRAP
3/8" -16
FLANGED
LOCK NUT

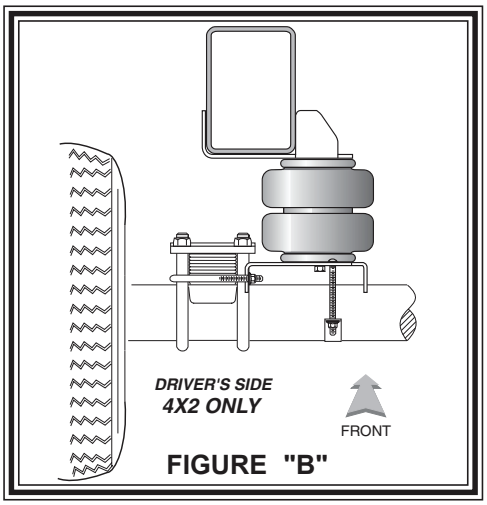

FIGURE "B"

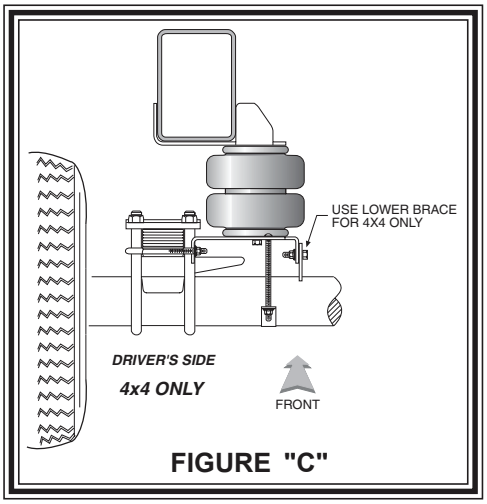

FIGURE "C"

STEP 1 - PREPARE THE VEHICLE

Remove the negative battery cable. With the vehicle on a solid, level surface chock the front wheels. Raise the vehicle by the rear axle and remove the rear wheels. After the removal of the wheels lower the vehicle so the axle rests on jack stands rated for your vehicles weight. Remove the jounce bumper located under the frame rail.

STEP 2 - PREASSEMBLE THE KIT

Select one air helper spring and an lower bracket from your kit. Next, place the 3/8"-16 x 5 1/2" carriage bolts into the square holes on the lower bracket. Fasten the lower bracket using a 3/8"-16 x 3/4" hex head bolt finger tight. ***See Figure "A"***.

STEP 3 - UPPER BRACKET INSTALLATION

Install the upper bracket on the frame using the 10mm x 30mm flat head allen bolt, ***see Figure "A"***. This will be located where the jounce bumper was removed. Attach the air spring to the upper bracket with the 5/8"-18 Nylon jam nut. The combination stud will use the inner most hole and the "button" on the air spring will be aligned with the outer most hole on the upper bracket(***see Figure "A"***). ***Note: On the exhaust side of the truck, a heat shield will be required. Please see heat shield manual.*** Install the air fitting into the air spring and tighten securely to engage the orange thread sealant, ***see Figure "A"***.

STEP 4 - LOWER BRACKET INSTALLATION

The lower bracket will rest on the axle with the outter portion placed between the U-bolts that hold the leaf stack to the axle. Insert the bail clamp into the two holes on the lower bracket from outside the leaf stack and secure with the 3/8"-16 hex nuts(***Figures "A" & "B"***) Push the axle strap onto the carriage bolts from the underside of the axle and secure it using the 3/8"-16 hex nuts ***see Figure "A"***.

On 4X4 modles, attach the lower brace to the lower bracket using the 3/8-16 x 1" hex head bolts and 3/8-16 hex nuts, ***see Figures "A" & "C".*** The lower bracket will rest on the "toung" instead of the axle. The rest of the attachments are the same(***Figure "A"***).

After everything is aligned, tighten the 3/8"-16 hex bolt on the bottom of the air spring.

STEP 5 - INSTALLATION TO THE PASSENGER'S SIDE ASSEMBLY

Reverse any orientations when assembling and installing the right, or passenger, side of the vehicle.

Parts List

DESCRIPTION	QTY.
HEAT SHIELD	1
CLAMPS	2

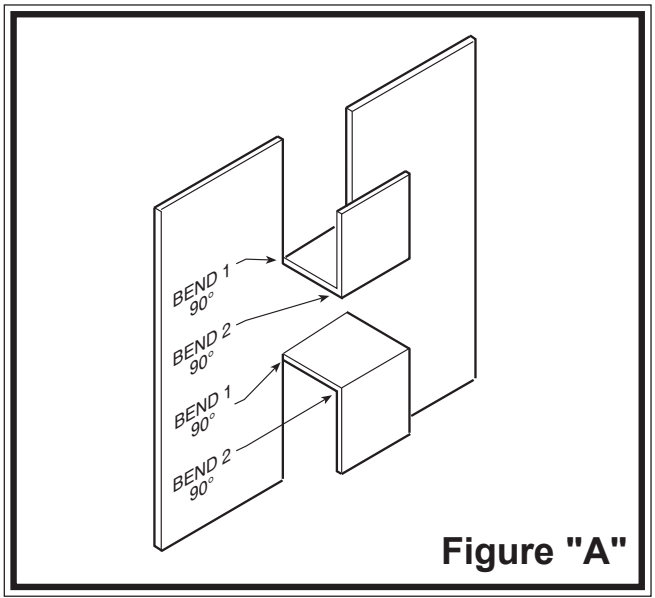

Figure "A"

Step 1

Bend the heat shield middle tab out at a 90 degree angle and bend the heat shield again half the distance up the tab at a 90 degee angle to form a "L" shape refer to *Figure "A"*.

Step 2

Mount the heat shield between the air spring and the exhaust pipe. Mount the heat shield using the clamps provided see *Figure "B"*. ***Maintain clearance between heat shield and moving axle, lines, etc...***

Step 3

Bend the heat shield around the exhaust pipe, while allowing for open air space of 1/2" to 1" as shown in *Figure "C"*.

Important:

In order for the air spring to function properly, there must be a minimum of 1/2" of clearance around the air spring.

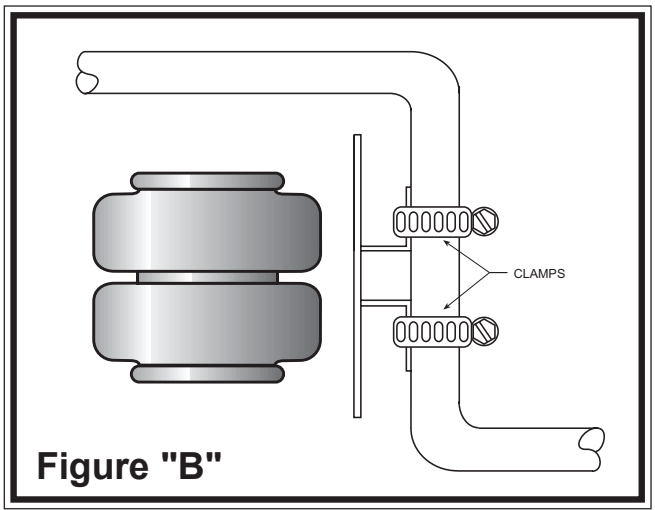

Figure "B"

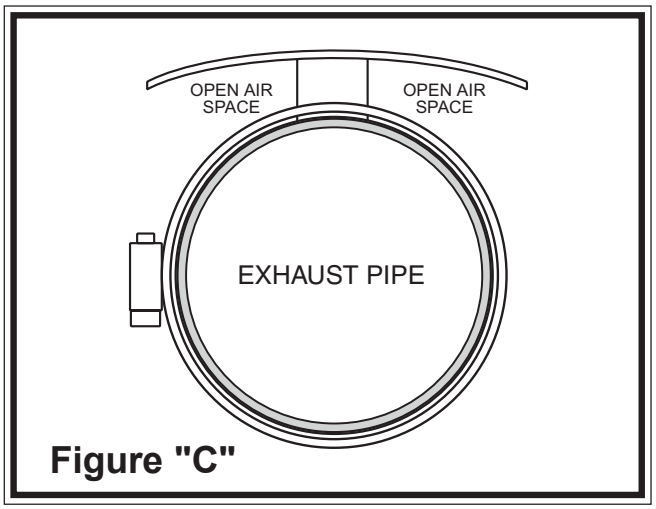

Figure "C"

STILL HAVE QUESTIONS?

Tech line hours

Monday - Friday 8Am - 6PM (EST) 812-482-2932

LevelTOW
ADVANCED TOWING SOLUTIONS
by ridetech

LevelTow Compressor System

Congratulations - your new LevelTow Compressor System is a quality product, that when used in conjunction with the LevelTow helper Air Springs, is capable of improving the handling and comfort of your vehicle. As with all products, proper installation is the key to obtaining all of the benefits your kit is capable of delivering. Please take a few minutes to read through the instructions to identify the components and learn where and how they are used. It is a good idea to start by comparing the parts in your kit with the parts list below.

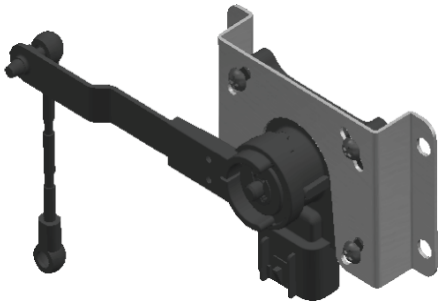

Components:	**Part #**	**QTY**
Compressor Unit	31920021	1
Smart Sensor Height Sensor	31980006	1
Compressor Mounting Bracket	90002637	1
Smart Sensor Mounting Bracket	70010596	1
Sensor Linkage	31980011	1
Linkage Axle Bracket	70011429	1
Control Panel Bracket	70011439	1
Airline Fitting (mounted in compressor)	31957016	1
Main Activation Switch	35970000	1
Manual Control Switch	70011413	1
Main Wire Harness	31900051	1
Axle Bracket Clamp	99000005	1
1/4” TEE Fitting	31954400	1
1/4” Fitting for airsprings Straight / 90 Degree	31954000 / 31954201	2
20 amp fuse	90001922	1
Fuse Holder	90001924	1
10-12 Butt Connector for Fuse Holder	90001913	1
Ring Terminal for Main Power Hookup	90001916	1
Hardware:		
#10 x 5/8” Phillips pan head - sensor to bracket	99104002	4
1/4”-14 x 1” Self Drilling Screw- Sensor to Frame	99254001	5
3/8-16 x 1” Thread Forming - Compressor Bracket to Frame	99373007	5
10-24 x 1 1/4” Maching Screw - Compressor to Bracket	99101007	4
10-24 Nylok Nut - Compressor to Bracket	99102002	4
#10 Flat Washer - Compressor to Bracket	99103001	8

The LevelTow Compressor System is an automatic leveling system, once it is turned on(button illuminated blue) it will operate without any assistance.

The Smart sensor supplied with the compressor system will tell the system to inflate or deflate to keep the vehicle level. It has a dwell range built in so that when the truck is going down the road hitting small defects the system will be idle. It isn't until the sensor gets out of this dwell range for 18 seconds that the system will react.

The activation switch has to be illuminated blue for the system to work.

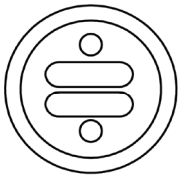

Activation Button

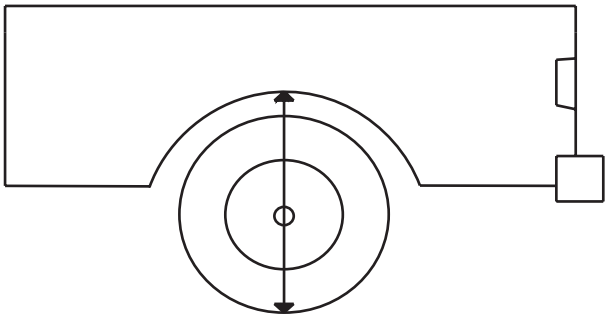

1. Before you install the compressor system, you will need to have the helper Airsprings installed. This will ensure that the LevelTow linkage does not get in the way of the Airsprings.

The first step to doing the install, with the vehicle at ride height, measure the lip of the fender to the ground at the center of the wheel and write it down.
Measurement_____
This measurement will be used as a reference once you have the compressor system installed.

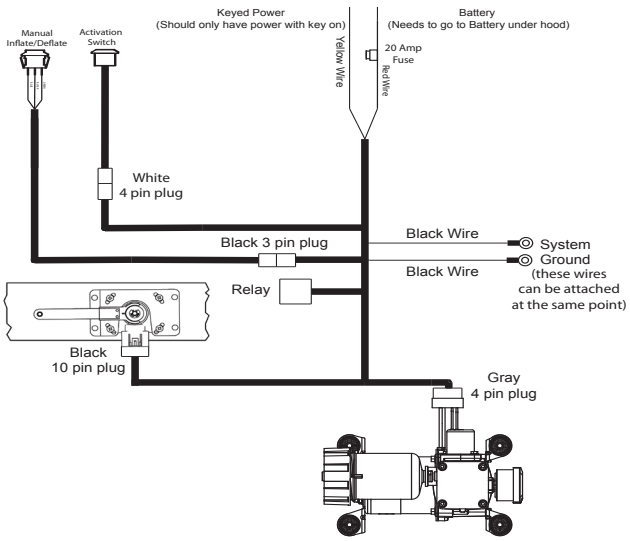

2. Unpack the wiring for the LevelTow system and lay it out. This will give you an idea to where you can mount the components without having to modify the wiring harness.

NOTE:
There is a wiring diagram on Page 7 to assist you in component location.

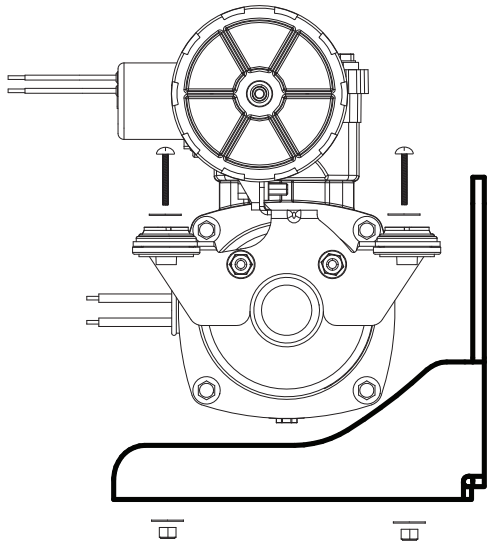

3. Bolt the compressor to the bracket. Position the compressor on the Bracket in the orientaion shown. Line up the holes in the (4) Mounting Bushings with the (4) holes in the Bracket. Install a #10 Flat Washer on each of the (4) #10-24 x 1 1/4" Pan Head Screws. Insert a Screw/Washer in each of the 4 holes. Install a #10 Flat Washer on the threads sticking through the bottom of the bracket followed by a #10-24 Nylok Nut. Tighten the hardware.

NOTE:

The diagram shows the position the compressor goes onto the plate.

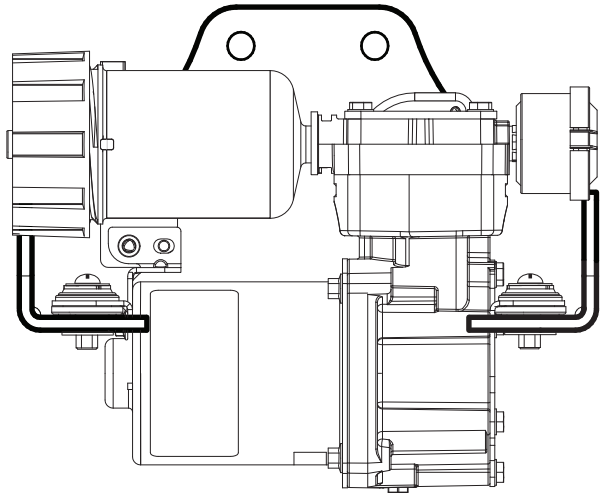

4. The compressor needs to be mounted on the frame rail with the dryer up. Attach the compressor bracket to the frame with (4) 3/8"-16 x 1" Thread Forming Bolts supplied in the kit. Drill a 5/16" Hole for the bolts.

NOTE:

Before drilling any hole be sure to check and see if there are any brake lines, fuel lines, or wires on the other side of the surface you are drilling.

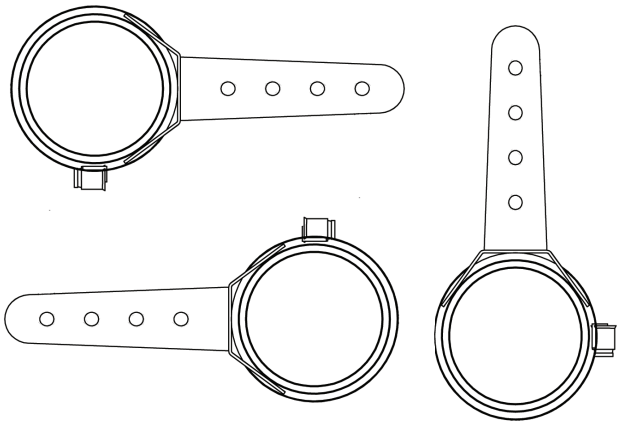

5. The Axle bracket can be mounted in any location on the axle tube to get the sensor linkage to line up. The Axle mount should be mounted on the axle so that the linkage will line up from the axle mount to the sensor. Keep this in mind when establishing the sensor location.

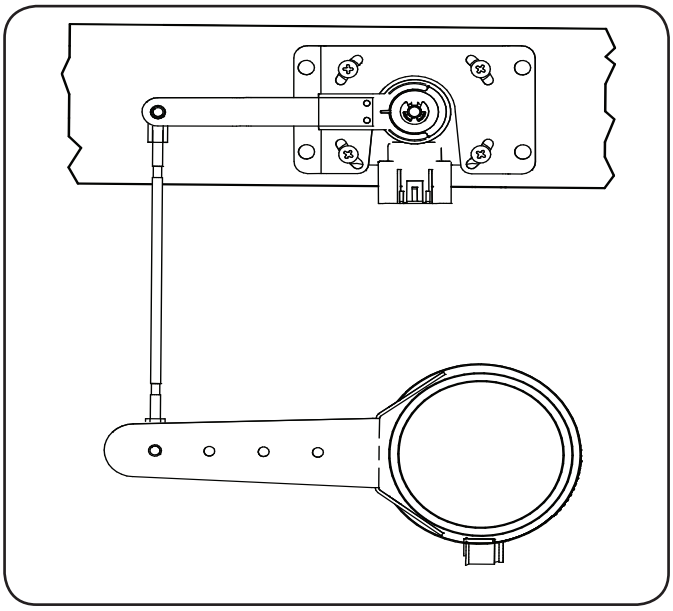

6. The next step will be to mount the sensor. The Smart Sensor needs to be centered in its travel at the trucks ride height to operate properly. This can be done by cutting the linkage rod to length. It can be fine tuned by loosening the 4 sensor mounting screws and twisting it in the mount and retightening the 4 screws. When the mounting and linkage is done it should look like the diagram seen here.

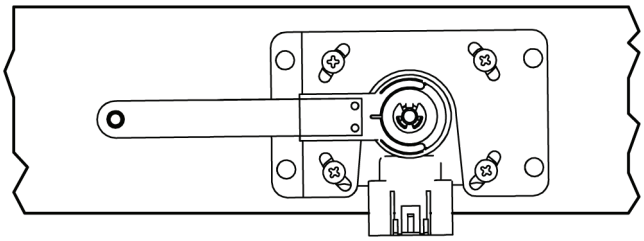

7. The sensor needs to be mounted on the frame rail with the wires pointing down. The arm will need to swing up opposite the direction of the wires as the suspension is being compressed. Attach the sensor bracket to the frame with (4) self drilling screws supplied with the kit.

NOTE:
The sensor can be mounted on the inside or outside of the frame. Make sure the linkage and arm can go through its entire travel without hitting any obstructions

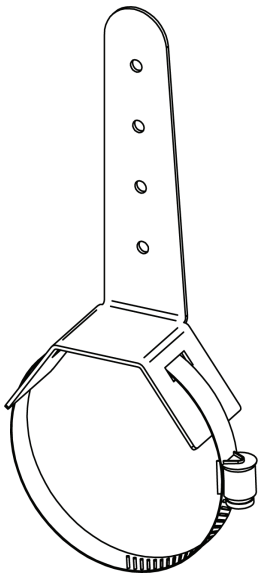

8. This diagram shows how the clamp sticks through the axle bracket. Loosen the clamp until it will open up and then slide it through the bracket. The whole assembly can then be put on the axle tube. Reinsert the end of the clamp back into the adjuster and tighten the clamp until the bracket is tight on the axle tube.

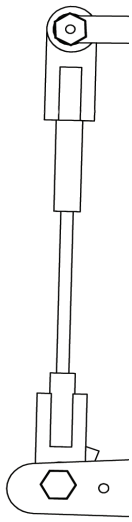

9. With the sensor and the axle bracket mounted, it is time to connect the 2 with the supplied linkage. The linkage is a universal length and will have to be cut to achieve the necessary length for your application. To do this it will be necessary to have the truck sitting at its factory ride height. With the truck at ride height center the sensor in its travel. The rod can slide into each rubber rod end up to 1”.

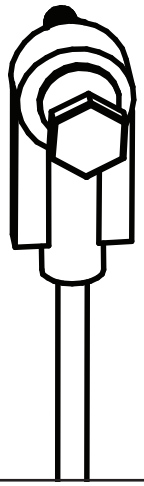

10. The linkage rod has barbs on the outside of it to keep it in the end link. After you push the ends in, they are difficult to pull back out. Push the linkage into the ends a little at a time until you get the desired length of the linkage assembly. If for some reason you must pull the rod out of the end, it is best done by twisting the end while pulling on it.

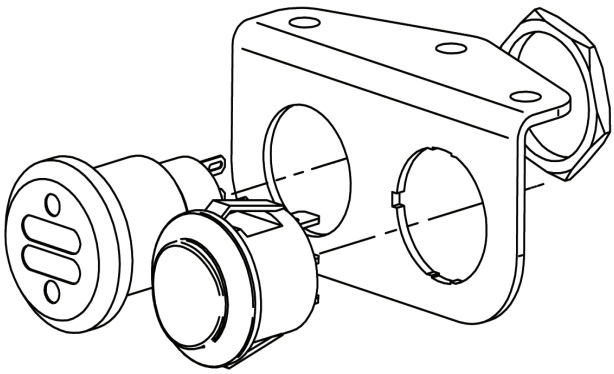

11. Mount the control panel in a convenient location. Install the Power Button and Manual Control Rocker into the panel. The Power Button gets installed into the round hole. The nut that is on the button is used to attach the button in the panel. The Rocker Switch goes into the hole with the notch in it. Align the tab on the switch with the slot and push the switch into the hole until it snaps in place. The rocker will only go into the hole one way. You can also custom mount the buttons if desired. They both use a 3/4” hole. The hole for the manual switch will have to have a slot for the tab

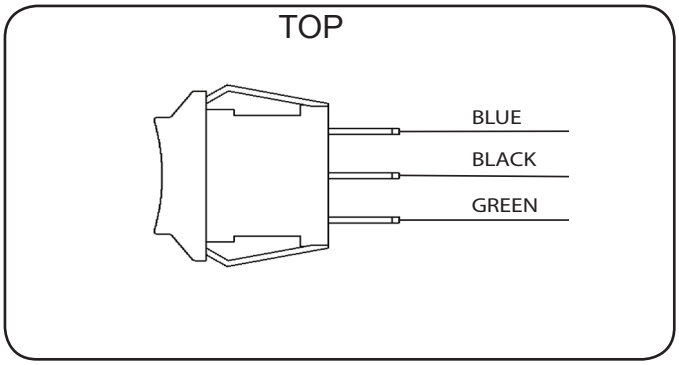

12. Hook the wires up to the manual control switch as shown in the diagram.

Green Wire-Manual Inflate
Black Wire -Switch Supply
Blue Wire - Manual Deflate

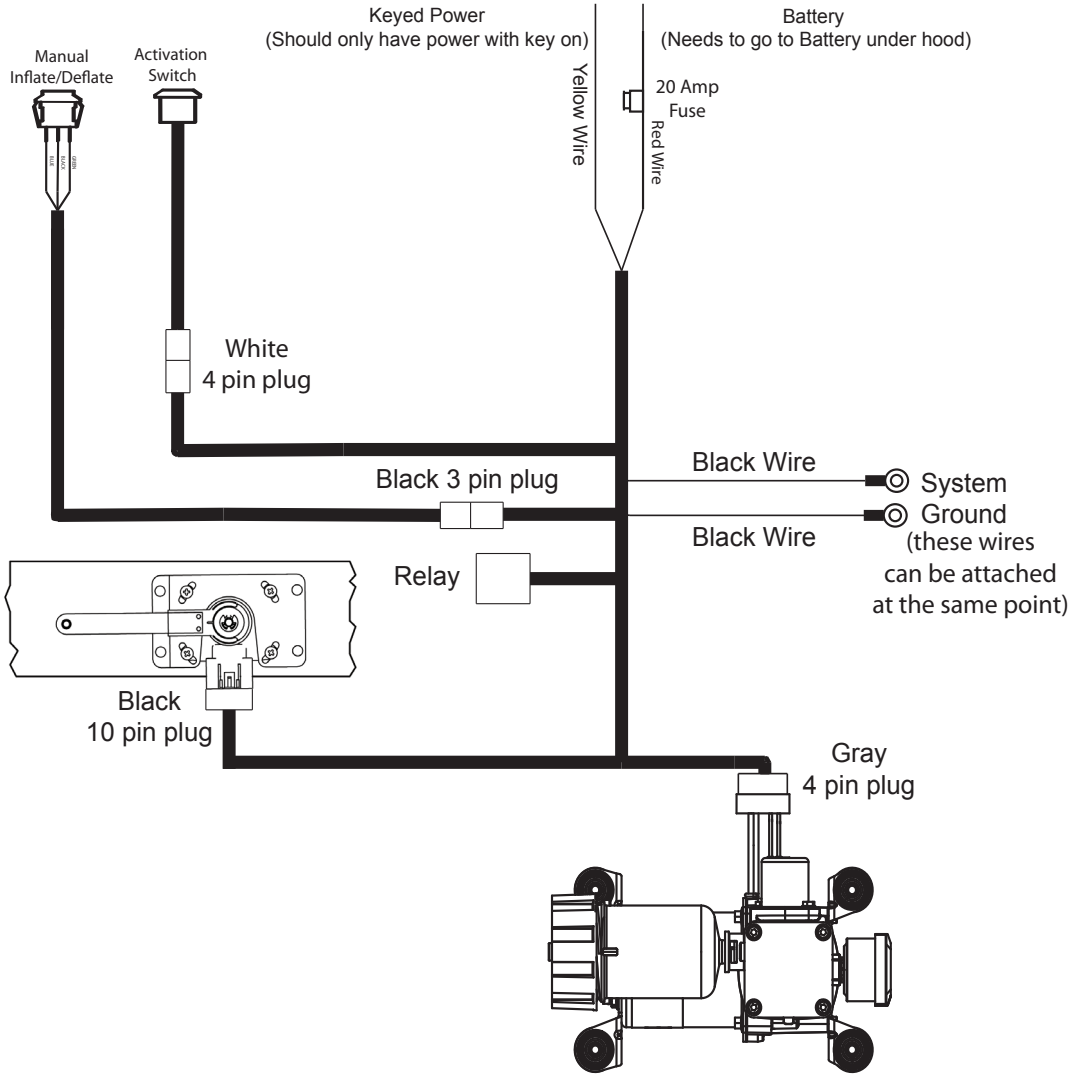

Red Wire - This wire needs to go straight to the **Battery** with the fuse holder installed within 18" of the Battery

Yellow Wire - This wire needs to go to a switched 12 volt power source. This wire should only have power when the key is on.

Black Wires - These wires go to a chassis ground. They can go to one of the screws attaching the compressor to the frame.

Relay - Will need to be attached to the frame with a self drilling screw supplied in the kit..

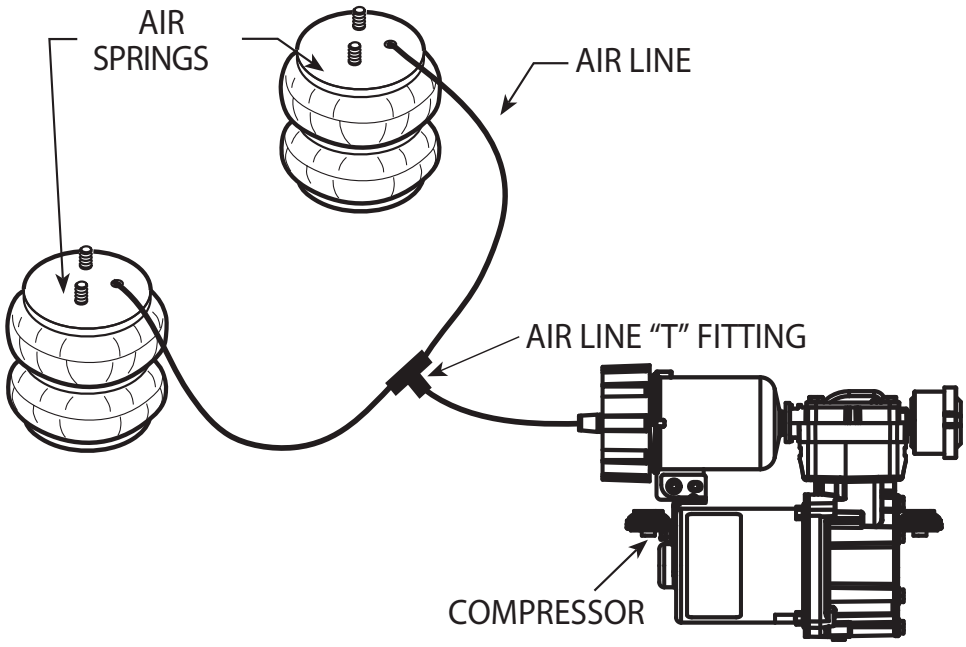

13. **Uncoil the airline being careful not to kink or flatten the line**. Start at the Airspring furthest from the compressor. Trim the airline so that the cut is clean and as square as possible. Insert the end of the airline into the fitting pushing it in as far as possible. Route the airline from the airspring to the compressor keeping it away the exhaust pipe and sharp edges. If it is necessary to run the line over a sharp edge, use a supplied thermal sleeve over the airline to protect it. The sleeve is installed by sliding it over the airline to the area where the line needs protected. **The airline should not be bent or curved sharply, this can cause the line to buckle or kink**. Secure the airline in place using the Zipties provided in the kit. Once the first airspring line is ran to the compressor, trim off the excess and use it for the remaining air spring line to the compressor. With both lines ran from the air spring to the compressor, install the "T" fitting on the lines and run the remaining side of the "T" fitting to the compressor fitting.

TIP: Wetting the end of the airline before sliding it into the fitting makes it easier to install into the fitting.

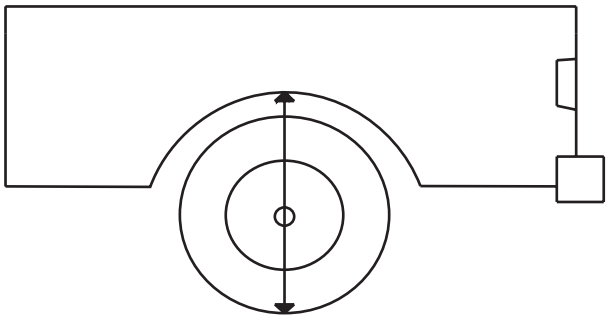

14. Once the system is installed you can verify the operation of the system by putting a load on the truck. With a load on the truck and the button illuminated blue, your fender to ground measurement that you took on the first step should be the same. If it is higher or lower you can adjust the height by loosening the 4 screws that attach the sensor to the bracket and twist in its mount. If ride height can not be achieved by adjusting in the bracket the linkage will need to be lengthened or shortened to achieve the height you need.

Manual Operation:
The LevelTow Compressor System also has a manual control function. This function allows you to manually inflated or deflate the system. To use the manual function you must first turn the system off by pushing the main power button. Once the system is turned off you can push the rocker switch up to inflate or down to deflate. To put the system back in level mode push the main power switch to turn it back on.

Note:
If the Activation Button is illuminated blue and the manual button is pushed the truck will relevel itself. The activation button has to be off for the manual control to be used and the truck remain at the height.

Troubleshooting:
If after installation you find the system not functioning correctly, you may have the sensor operating the wrong direction. You can verify this by turning the truck on and check that the activation button is illuminated blue. Unhook one end of the linkage and move the sensor arm by hand. If when you move the arm down (Keep in mind there is an 20 second delay) and the Air spring inflates, the sensor is operating in the wrong direction. You can fix this problem without remounting the sensor by swapping the blue and green wires in the harness at the sensor. To do this, with the truck turned off, simply unplug the harness from the sensor. Using a small screwdriver pop the purple retainer out of the plug by prying up on each end of it. After removing the retainer if you look into the end of the plug you will see a tang holding each wire terminal. Simply pry it down just enough to release the terminals of the blue and green wires. Swap the blue and green wire postion and reinstall the wires into the plug paying attention to the direction of the small tab on the wire terminal. This tab will point to the center of the plug. Push the wire terminals into the plug making sure they catch on the tang and reinstall the purple retainer. After plugging the sensor back in you can confirm correct operation by turning the truck back on moving the sensor arm up, the Air spring should inflate. If the system is functioning correctly, shut the truck off and reattach the linkage.

WIRE LOCATIONS AT HEIGHT SENSOR

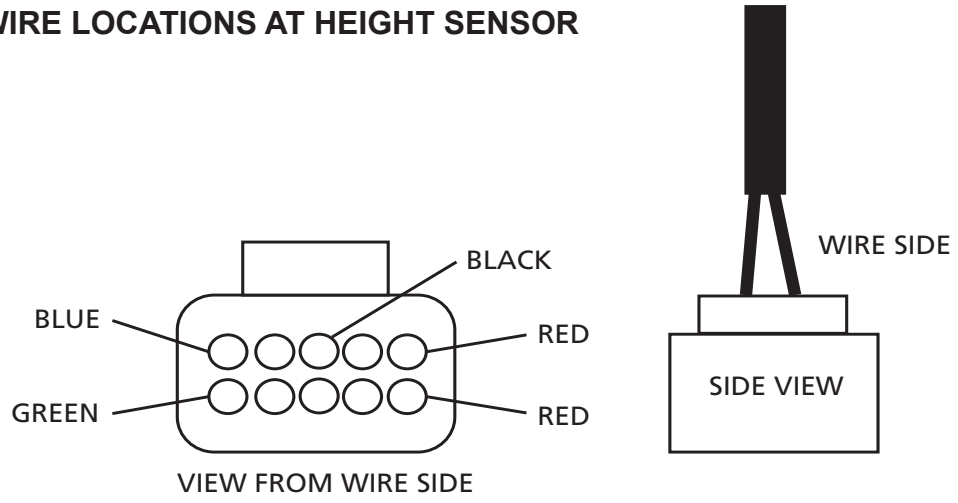

STILL HAVE QUESTIONS?
Tech line hours
Monday-Friday
8AM - 6PM (EST).....812-482-2932