SMALL BLOCK CHEVROLET CRATE ENGINES
Part #45000 - 46221

GENERAL INSTALLATION INSTRUCTIONS

PLEASE study these instructions carefully before beginning this installation. If you have any questions, please call our **Technical Hotline at: 1-800-416-8628**, 7:00 am - 5:00 pm, Pacific Standard Time, Monday through Friday.

IMPORTANT NOTE: Proper installation is the responsibility of the installer. Improper installation will void your warranty and may result in poor performance and engine or vehicle damage.

IMPORTANT: *This instruction sheet provides general installation guidelines which can affect your warranty. Read it carefully. It is not our intent to cover each detail of installation here as the procedures are vehicle specific. We want to caution you that installing an engine is a complicated procedure that requires a good general knowledge of automotive mechanics. It is a good idea to refer to the factory service manual for your vehicle. If you are not confident that you can complete the engine installation successfully, we suggest you consider having it installed by an experienced mechanic.*

DESCRIPTION: The Performer, Performer RPM and E-Tec crate engines are assembled using all new parts. The short block is from General Motors and Edelbrock Power Package components have been installed by trained technicians at Edelbrock. The Performer level engine has an operating range from idle to 5500 rpm, and will work with stock type torque converters. The Performer RPM range is from 1500-6500 RPM, so a torque converter with a stall speed of 1800 to 2200 rpm is recommended. Use of a torque converter with a stall speed greater than recommended can cause significant power loss and damage to various drivetrain components. Performer and Performer RPM manifolds will accept early model water necks, air conditioning, and alternator brackets. E-Tec manifolds will require modifications when used with standard brackets to fit the upright Vortec style manifold bolts.

INSTALLATION NOTES: ***There is no oil in your engine***. Performer level engines can use a right side (GM #141-551) or left side (GM #141-500) oil dipstick. These parts can be purchased through your local GM parts dealer. A plug is supplied to seal the hole not used for dipstick, which must be done before starting engine. Performer RPM engines use a right side dipstick only. Remove any paint from engine mount bosses, cylinder block to clutch housing or transmission mounting surface, water pump mounting, and crankshaft flange before installing engine.

NOTE: *These engines are **not** supplied with the crankshaft bolt due to many different applications. The customer must purchase and install the crankshaft bolt that matches the given application.*

ENGINE OIL: Your engine is supplied with Edelbrock Break-In Oil in the crate. Before starting engine, you will need to prime the oil system. ***Do not turn engine over with starter motor for priming.*** You will need to mark distributor, as it comes preset on #1 cylinder. Then, remove and use a priming tool to turn pump shaft. This tool can be purchased at your Speed Shop. Change the engine oil no more than 300 miles after break-in. **Vic Edelbrock** recommends Edelbrock Zinc Enhanced 10w40 motor oil (#1073 1qt.; #1083 case of 12 qts.) to be used with this engine in most climates to provide the necessary wear protection that is no longer found in most conventional oils. This special formulation has been developed specifically to enhance the longevity and performance of both classic and modern V8 engines.

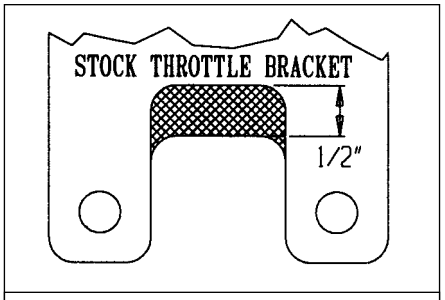

Figure 1 - Stock Throttle Bracket
Remove material in shaded area on stock throttle brackets to clear the manifold.

THROTTLE BRACKETS: Due to the design of Performer and RPM manifolds, the throttle and kickdown bracket on some vehicles may require modifications to fit ***(See Figure 1)***. To simplify the installation, Edelbrock makes an assortment of brackets like #8031 for Performer and Performer RPM engines, #8032 for the E-Tec engines. See the "Install Items" listed at our website and in our catalog.

FLYWHEELS AND FLEXPLATES: Performer engines 45100-45551 use neutral balanced flywheels for two-piece crank seal engines. RPM engines use special flywheels for one-piece seal engines.

Performer engines use flywheels or flexplates for two-piece crankseal engines.

	GM Part Number	Outside Diameter	Converter Bolt Pattern	Starter Ring Gear Teeth
Flex Plates:	471529	12.75"	9.75", 10.75"	153
	471598	14"	10.75", 11.50"	168

	GM Part Number	Outside Diameter	Clutch Bolt Pattern	Starter Ring Gear Teeth
Flywheels:	14085720	12.75"	10.4"	153
	3991469	14"	10.4", 11.0"	168

©2010 Edelbrock LLC

Performer RPM engines use flywheels or flexplates for one-piece crankseal engines.

	GM Part Number	Outside Diameter	Converter Bolt Pattern	Starter Ring Gear Teeth
Flex Plates:	14088765	12.75”	10.75”	153
	14088761	14”	10.75”, 11.50”	168

	GM Part Number	Outside Diameter	Clutch Bolt Pattern	Starter Ring Gear Teeth
Flywheels:	14088650	12.75”	10.4”	153
	10105832	14”	11.0”, 11.85”	168

EXHAUST SYSTEMS: Performer level engines will work with stock exhaust manifolds. It is to your advantage to install headers and a good free flowing muffler system. RPM engines must use headers and a free-flowing muffler system.

FINAL NOTES: Install the engine assembly reversing the steps taken to remove the engine and accessories. When in doubt, refer to the factory manual. We recommend a 50-50 mix of coolant and water. We recommend a new thermostat of 160 to 180 degrees, along with new belts and hoses. Check all grounds and fluid levels. Spark plug recommendation is Champion RC-12YC or equivalent. Your MSD ignition comes with a preset advance curve and will work with an initial setting of 10 to 12 degrees. Check MSD instruction sheet for other options and also distributor hook up. Check carburetor instruction sheet for hook ups and owner's manual for tuning tips. The RPM engines require ***91 octane fuel***. In some cases, it may be necessary to plug the vacuum advance from the distributor to the carburetor, to prevent detonation. The Performer engines always use the vacuum advance. A re-torque is recommended after initial start-up and cool-down (allow 2-3 hours for adequate cooling). Torque cylinder heads to 65 ft./lbs. following the tightening sequence ***(See Figure 2)***. Torque Performer and Performer RPM intakes to 25 ft./lbs. ***(See Figure 3)***. Torque E-Tec intakes to 11 ft./lbs. (see Figure 4). Save all paperwork that you receive with your engine for future reference.

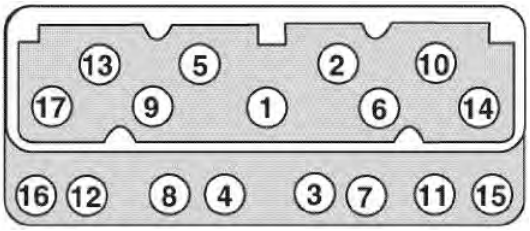

Figure 2 - Cyl. Head Bolt Torque Sequence

ENGINE AND CAMSHAFT RUN-IN: It is important when first starting the engine to keep the rpm above 2,000 for the first 30 minutes. Make sure all fluid levels are topped off and all lines and hoses are hooked up correctly. The break in must be done non-stop. Otherwise, the cam will not break-in properly. This is also a good time to look for leaks of any kind. **RPM E-Tec engines use a roller cam and do NOT require above procedure.**

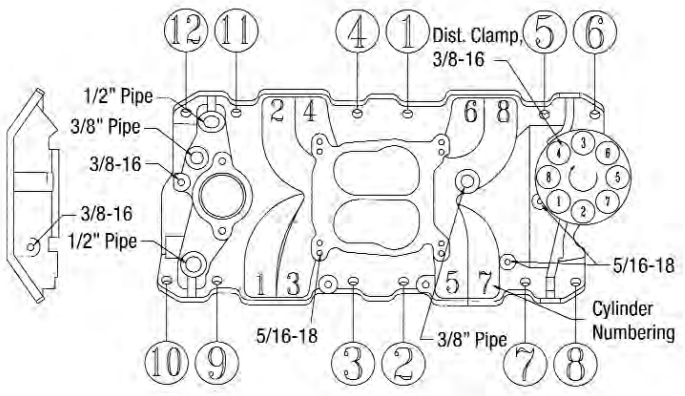

Figure 3 - Intake Manifold Tightening Sequence
Small Block Chevy Firing Order: 1-8-4-3-6-5-7-2
Turn Distributor Counter-Clockwise to Advance Ignition Timing

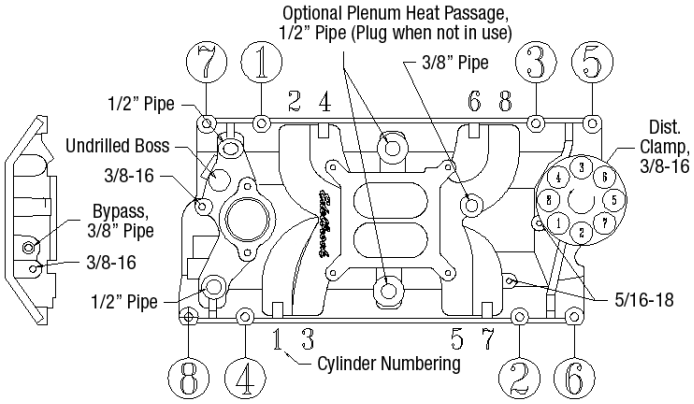

Figure 4 - Intake Manifold Tightening Sequence
Small Block Chevy Firing Order: 1-8-4-3-6-5-7-2
Turn Distributor Counter-Clockwise to Advance Ignition Timing

NOTICE

To properly protect your investment, you MUST send in your warranty information. The warranty papers are supplied in your kit.

Edelbrock LLC • 2700 California St. • Torrance, CA 90503
Tech-Line: 1-800-416-8628 • Office Line: 310-781-2222

©2010 Edelbrock LLC