Installation Instructions

PRO-FLO®2

ELECTRONIC FUEL INJECTION

Pro-Flo2 System #35000
Shown Here

Multi-Point Electronic Fuel Injection

ENGINE CONTROL & DATA SYSTEMS

TABLE OF CONTENTS

Part #35080, #35090 and #35260

Introduction....1
Components....2
Preliminaries....3
Fuel System....6
Induction System....10
Sensors....13
O2 Sensor Installation....15
Main System Harness....16
Ignition System....20
Other Applications....21
Software Installation....22
Calibration Selection....23
System Start-Up....24
Electronic Engine Management....27
Pro-Flo Quick Tuning Guide....28
Optional PC Tuning Feature....29
Calibration Module Flowchart....30
Parts and Part Numbers....31
Service & Warranty....33

INTRODUCTION

Thank you for selecting the Edelbrock Pro-Flo Fuel Injection System. These Multi-Point Fuel Injection Systems have been designed for small-block and big-block Chrysler engines, and are designed to provide excellent performance, fuel economy, and maintenance-free operation. Installation of the Edelbrock/ Pro-Flo Fuel Injection System involves modifications to the fuel system, ignition system, induction system, and possibly the valve train. Although there are steps that must take place before others, the modifications do not necessarily have to be performed in a particular order. Each modification is described in a separate section in this manual. Please study these instructions carefully before beginning installation of any part of the Pro-Flo system.

If you have any questions, do not hesitate to call our EFI Technical Hotline at (800) 416-8628, 7am-5pm PST, Monday-Friday

(In order to properly relay your call, please press 1 at the prompt to select Automotive Products, followed by 3 to select EFI-Electronics then 1 again for Multi-Point EFI.)

Our EFI Technical Support staff can also be reached via email at: EFItech@Edelbrock.com

©2008 Edelbrock Corporation

PRIMARY KIT COMPONENTS

- ❑ Electronic Control Unit/System ECU
- ❑ Calibration Module
- ❑ Distributor conversion kit
- ❑ Fuel injectors
- ❑ ECU power relay/Fuel pump relay
- ❑ Manifold Absolute Pressure (MAP) Sensor
- ❑ Manifold Air Temperature (MAT) Sensor
- ❑ Coolant Temperature Sensor (CTS)
- ❑ Throttle Position Sensor (TPS), integrated with air valve
- ❑ Oxygen (O_2) sensor
- ❑ USB/Serial Converter
- ❑ Software CD
- ❑ Fuel filter
- ❑ Fuel rail assembly
- ❑ Fuel pressure regulator
- ❑ High pressure fuel pump
- ❑ Intake manifold
- ❑ Four barrel air valve
- ❑ Idle Air Control (IAC) solenoid, integrated with air valve
- ❑ Main system harness
- ❑ Fuel pump harness
- ❑ Installation package
- ❑ Ignition Harness

Many Pro-Flo components, including the Manifold Absolute Pressure sensor, fuel pressure regulator, Coolant Temperature sensor, and the fuel filter are standard OEM pieces. In the event that one of these parts needs to be replaced, you are likely to find a replacement at your local parts supplier, in addition to your local Edelbrock dealer or directly from Edelbrock. For a list of part numbers, refer to the **PART NUMBERS** section at the back of this manual.

©2008 Edelbrock Corporation

TOOLS AND EQUIPMENT

Use the following checklist for items needed.

- ❑ Box and open end wrenches
- ❑ Socket set
- ❑ Distributor wrench
- ❑ Pliers (channel locks and hose clamp)
- ❑ Screwdrivers (regular and Phillips)
- ❑ Torque wrench
- ❑ Hammer
- ❑ Gasket scraper or putty knife
- ❑ Timing light
- ❑ Vacuum gauge
- ❑ Rags
- ❑ Water bucket
- ❑ Drill and bits
- ❑ Hole saw (1 1/4-inch or 1 3/4-inch)
- ❑ Tubing wrenches
- ❑ Tubing cutter

HARDWARE AND PARTS RECOMMENDED

Use the following checklist for items needed.

- ❑ Intake gasket - #35260 uses Edelbrock gaskets #7276; #35090 & #35080 use gaskets #7225 with OE-style valley pan
- ❑ Pipe plugs, if needed
- ❑ 5/16-inch steel tubing (approximate equal length to fuel pickup line in tank)
- ❑ Edelbrock Gasgacinch #9300
- ❑ Loctite 598 OEM High Temperature Silicone Gasket (O_2 Sensor Compatible)
- ❑ Radiator coolant
- ❑ Wiring diagram for your vehicle
- ❑ Teflon tape or liquid Teflon thread sealer
- ❑ Manifold bolt kit - #35260 uses #8594; #35080 & #35090 use #8579
- ❑ 195° Thermostat
- ❑ Resistor type spark plugs (Use correct heat range for your particular application
- ❑ Set of low-resistance spark plug wires with high EMI suppression (DO NOT use solid core spark plug wires)
- ❑ Dynojet wideband commander (Optional, not included)
- ❑ DB9 Serial cable (Optional, not included)

PRELIMINARY CHECKLIST

1. **CAREFULLY STUDY AND UNDERSTAND ALL INSTRUCTIONS, BEFORE BEGINNING THIS INSTALLATION.**
   NOTE: This installation can be accomplished using common tools and procedures. However, you should have a basic knowledge of automotive repair and modification and be familiar with and comfortable working on your vehicle. If you do not feel comfortable working on your vehicle, it is recommended to have the installation completed by a professional mechanic.
2. **Examine the Pro-Flo system for possible shipping damage. If damaged, contact your dealer immediately.**
3. **The 35080 & 35090 kits are designed for use with a standard 413-426 (wedge)-440 firing order.**
4. **The 35260 kit is designed for use with a standard 318-340-360 firing order.**
5. **Check all threaded manifold holes.**
6. **Check all internal manifold passages with a light and wire, making sure they are clean and unobstructed.**
7. **Check automatic transmission shift points before removal of your stock manifold and adjust linkage after Edelbrock manifold installation for same shift points (if needed).**

NOTE: We recommend that you refer to this checklist again after installation to be sure that you have completed all steps.

©2008 Edelbrock Corporation

DETERMINING HOOD CLEARANCE

NOTE: Check hood clearance before removing stock manifold.

1. Use modeling clay or putty to make five small cones, two or three inches high.
2. Position cones on air cleaner at front, rear, each side, and on center stud.
3. Close hood to locked position and re-open.
4. The height of the cones indicate the amount of clearance between the hood and the air cleaner. Record these measurements.

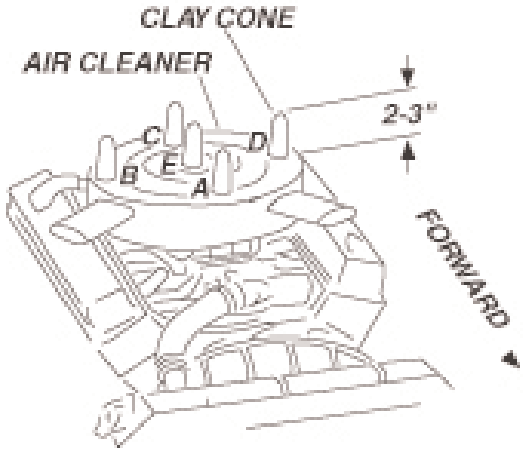

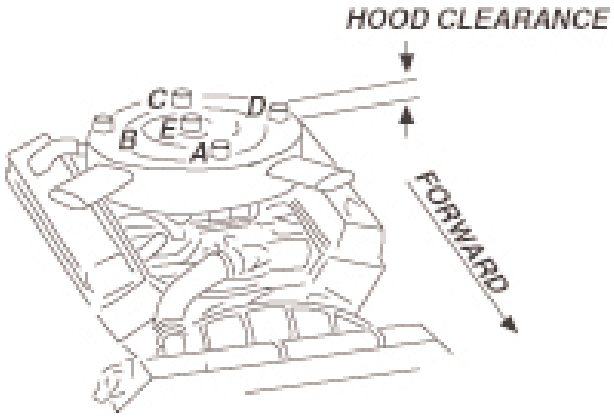

MANIFOLD & CARBURETOR HEIGHT VS. PRO-FLO HEIGHT

1. Remove air cleaner.
2. Lay a straightedge (such as a yardstick) across the top of the carburetor from front to back.
3. Measure from block and manifold end seal surfaces to straightedge.
4. Record these measurements (height A and height B).
5. Add height A and height B and divide by two to get the average height.
6. The Pro-Flo manifolds #35080 & #35090 measure: A= 4.80" by B= 5.80". The #35260 measures A= 5.78" by B= 6.78". The air valve measures 2.25".
9. Compare the two measurements. If the Pro-Flo unit is taller, subtract this amount from the hood clearance figure to determine new hood clearance.

CAUTION: You must maintain at least 1/2-inch clearance between the hood and air cleaner because of engine torque. If you have insufficient clearance, a low profile air cleaner may solve the problem.

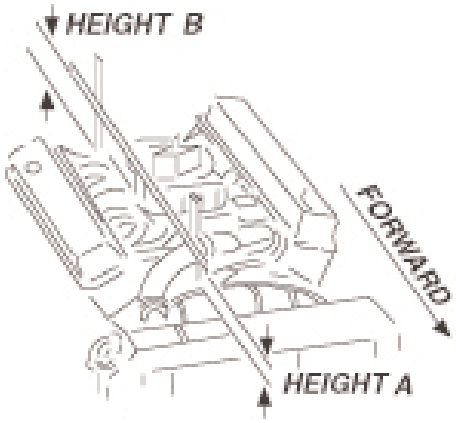

EMISSION CONTROLS

The Edelbrock Pro-Flo system will not accept stock emissions control systems. Check local laws for requirements before installing the Pro-Flo system. Not legal on pollution-controlled motor vehicles.

©2008 Edelbrock Corporation

FUEL REQUIREMENTS

Because the Pro-Flo system uses an Oxygen sensor, you must use unleaded fuel only. Leaded fuels will damage the O_2 sensor. If you do use leaded fuel in your vehicle, do not install the O_2 sensor and do not operate the vehicle in the closed loop fuel mode.

AUTOMATIC TRANSMISSION CHECK

For best performance, economy, and emissions, the shift point must be checked before and after the manifold change.

NOTE: This check should be performed ONLY at a sanctioned drag strip or test track.

With the shifter in Drive, accelerate to wide open throttle from a standing start. Hold in this position, noting speedometer MPH when the transmission makes the first 1-2 shift. After the Pro-Flo system has been installed, make the same test, again noting MPH of this first shift.

If adjustment is necessary, we recommend use of the Edelbrock Throttle, Cruise Control, & Transmission Kick-Down Mounting Bracket #8031. The Turbo 350 and Turbo 200 feature a window to accommodate user adjustment of shift points at WOT.

The transmissions in certain vehicles require precise adjustments. We recommend that you consult a reputable transmission shop for final adjustments once the Pro-Flo system has been installed. Incorrect shift points can result in transmission damage.

ENGINE CLEANING

Edelbrock recommends that the Pro-Flo system be installed on a clean engine in order to prevent dirt from falling into the engine lifter valley or intake ports.

1. Cover ignition. Use engine degreaser and a brush to thoroughly clean the manifold and the area between the manifold and valve covers.

2. Rinse with water and blow dry.

EXHAUST MANIFOLD HEAT RISER VALVE

If your vehicle is equipped with an exhaust manifold heat riser valve (typically located on the passenger side of the vehicle below the exhaust manifold), remove the valve for proper operation. If applicable, any air injection tubes must be removed and holes in the exhaust manifold plugged for proper operation.

HEADERS

For best performance, headers are recommended. For this application, header primary tube diameter should be 1-3/4 inch, approximately 31 inches long and terminating into a 3 inch collector. The remainder of the exhaust system should consist of dual exhaust and tail pipes, at least 2-1/4 inches in diameter with low back pressure mufflers.

COOLING SYSTEM

The minimum requirements for the thermostat are 180° but the ideal thermostat is 195°. When the vehicle is at 175 or below, system will stay in cold start mode and not perform properly.

©2008 Edelbrock Corporation

FUEL SYSTEM

Because your Edelbrock Pro-Flo system controls fuel delivery very differently than a carburetor, some conversions to your fuel system are necessary. Pro-Flo electronic fuel injection requires high and constant fuel volume and fuel pressure. For this reason, a good primary fuel line is critical. The Pro-Flo system includes a 3/8-inch high pressure fuel line which must be used as the primary fuel line. The fuel that bypasses the injectors must be returned to the fuel tank via a return fuel line. If your vehicle is already equipped with a fuel pump bypass line, this line can be used as the return fuel line. If not, the original primary line may be used as the return line. If desired, an 8 foot length of 5/16 ID rubber hose is supplied for use as the return line.

Many late-model cars are equipped with an additional fuel line which runs to a charcoal canister mounted on the driver side of the vehicle. This line MUST be re-installed after the fuel system conversion and MUST NOT be used as the return fuel line.

FUEL PUMP AND FILTER

The Pro-Flo system uses a single Edelbrock high-pressure electric fuel pump which is capable of pumping 50 psi. The pump relay will shut down the pump if it does not receive an engine-run signal from the ECU, as in the case of a stall. This safety precaution is necessary when using a high-pressure fuel line. The provided fuel filter should be mounted between the engine compartment and the fuel pump to allow fuel to be pushed through the filter rather than drawn through. Electrical connectors should face the front of vehicle. Make sure the fuel pump is mounted at or below the bottom of your fuel tank. If the pump is mounted above this point, fuel pump failure will occur.

FUEL PRESSURE REGULATOR

Fuel pressure is as important as fuel volume, particularly in fuel injection. The Pro-Flo fuel pressure regulator maintains a constant pressure at the injectors with a spring loaded by-pass to the return fuel line. Manifold Absolute Pressure references the regulator diaphragm to maintain constant pressure across all 8 injectors, regardless of fluctuating manifold pressure (vacuum) level. The fuel that is not injected is returned to the fuel tank via the return fuel line.

RETURN FUEL LINE

Due to the high fuel pressure used by the Pro-Flo system, **the supplied 3/8-inch high pressure fuel line MUST be used as the primary fuel line**, and a bypass fuel return line must be installed. There are three options for installing a bypass return line.

1. Use the 5/16 rubber fuel line provided with the system as the fuel return line.

2. Use the vehicle's existing primary line as the fuel return line with modification to the pick up as described below.

3. Use the vehicle's existing return line (if so equipped) as the fuel return line. This option applies only to vehicles previously equipped with fuel injection. If the vehicle is not already equipped with a return line, some fuel tank modifications are required for routing the return line through the sending unit plate back into the tank. The first two methods listed below require some welding and should be done by a professional radiator or fuel system repair shop.

©2008 Edelbrock Corporation

RUBBER RETURN LINE METHOD

Drill a 5/16-inch hole in the sending unit plate adjacent to where the main line enters the tank. This will be the hole for your return line. Insert a short length of 5/16-inch hard line (available at most radiator shops) into the hole and weld it to the sending unit plate. The hard line should extend through the hole 1 to 2 inches on each side of the plate. Connect a length (at least 4 inches) of 5/16-inch rubber return line hose to the hard line that will extend into the tank. Connect the rubber line to the fuel pickup line using tie wraps.

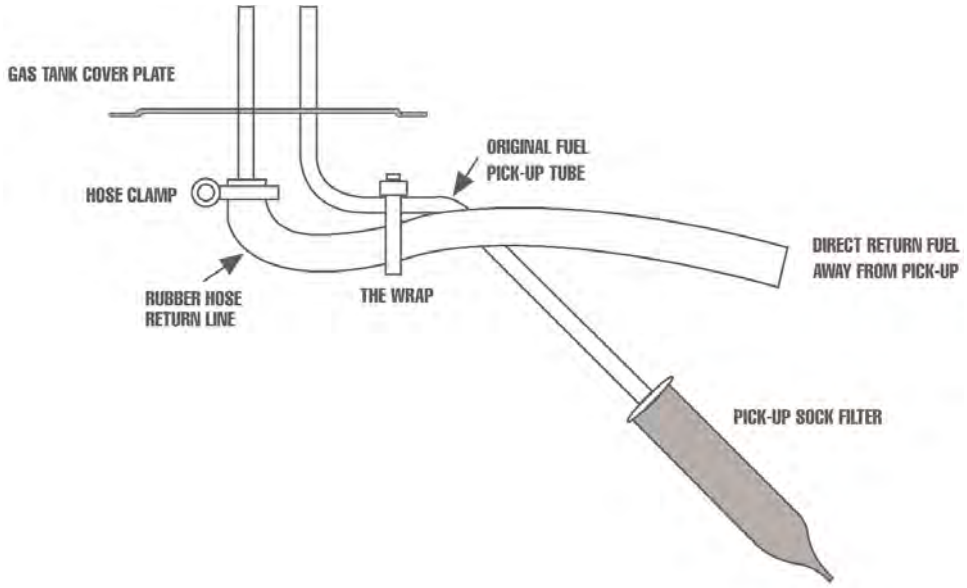

RUBBER HOSE METHOD

BULKHEAD FITTING METHOD

Drill a 9/16-inch hole in the sending unit plate adjacent to where the main line enters the tank. This will be the hole for your return line. Insert a #6 AN bulkhead fitting (available at most radiator shops) into the hole, the narrow end of the fitting on the inside of the plate. Apply a rubber washer or RTV sealant and fasten the fitting to the plate with the nut. Connect a length (at least 4 inches) of flexible return line (rubber or braided hose) to the fitting end. Connect the return line to the fuel pickup line using tie wraps.

NOTE: THIS METHOD REQUIRES NO WELDING OF THE FUEL SYSTEM.

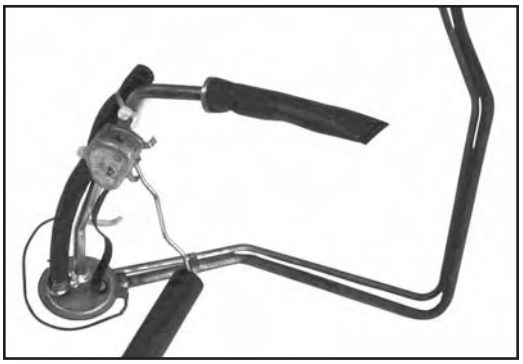

NOTE: Whichever method you use to install the return fuel line, be careful to keep the end of the line away from the fuel pickup, as shown. Otherwise, aerated return fuel can be drawn into the pickup.

©2008 Edelbrock Corporation

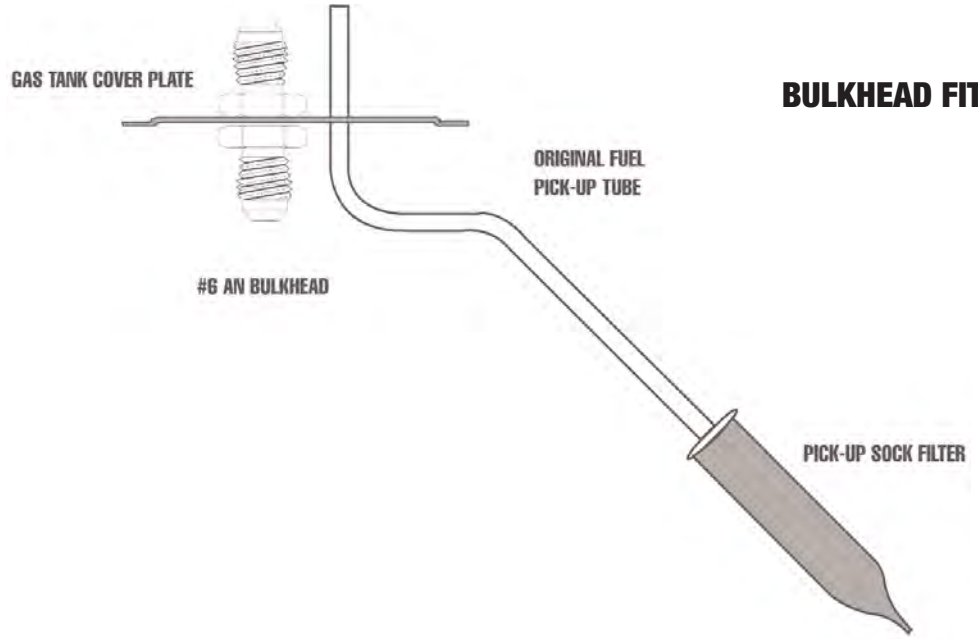

BULKHEAD FITTING METHOD

HARD RETURN LINE METHOD

Drill a 5/16-inch hole in the sending unit plate adjacent to where the main line, enters the tank. This will be the hole for your return line. Insert a length of 5/16-inch hard line (available at most radiator shops) into the hole and weld it to the sending unit plate. The hard line should extend through the hole 1 to 2 inches on the outside of the plate. On the inside of the plate, the hard line should follow the contours of the fuel pickup line. Bend the end of the return line away from the sock on the end of the fuel pickup line. Solder or weld the return hard line to the fuel pickup line.

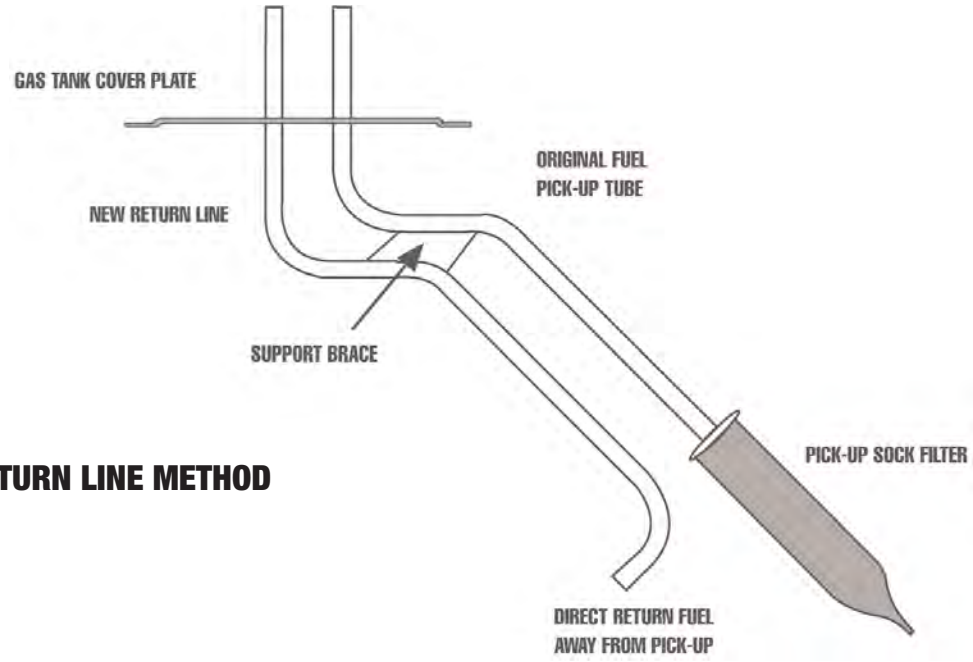

HARD RETURN LINE METHOD

©2008 Edelbrock Corporation

NOTE: ALL WELDING AND SOLDERING OF THE FUEL SYSTEM MUST BE PERFORMED BY A PROFESSIONAL RADIATOR AND/OR FUEL SYSTEM REPAIR SHOP.

FUEL SYSTEM INSTALLATION

1. Drain the fuel tank.

2. Remove all fuel lines from the tank and from the carburetor.

3. Remove the fuel tank.

   NOTE: While the fuel tank is removed from the car, it is recommended that it be professionally cleaned in order to remove any rust or dirt that may have accumulated inside and which could damage the injectors.

4. Remove the sending unit from the fuel tank. Refer to the RETURN FUEL LINE methods above for installing the bypass fuel return line.

5. Install the provided 3/8-inch primary fuel line directly above the original line, which may now serve as a return line. Use large radius bends. Avoid the exhaust pipe and any sharp edges.

   NOTE: The 3/8-inch high pressure fuel line supplied with the Pro-Flo system must be used as the primary fuel line.

6. If you do not use the original fuel as the return line, route the return line directly alongside the provided 3/8-inch primary fuel line.

7. Mount the fuel pump between the tank and the fuel filter as low and as close to the fuel tank as possible. The pump is directional. Electrical connectors should face the front of vehicle. The fuel pump needs to be at or **below** the bottom of the fuel tank.

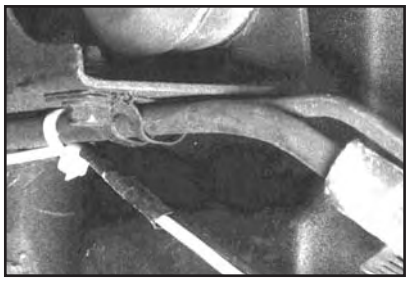

8. Mount the fuel filter between the fuel pump and the engine.

9. Re-install the modified sending unit plate to the clean fuel tank.

10. Reinstall the fuel tank.

11. Attach the primary line and return line to the sending unit plate on the tank.

12. Re-attach all other fuel lines at the tank (vapor purge lines, etc., if so equipped).

13. Secure the primary and return fuel lines with the provided tie-wraps, or with Adel clamps if available.

14. Re-attach all fuel lines to the induction system once it has been installed.

15. Use the 10-foot wiring harness to connect the fuel pump to the Main System Harness. Route the harness away from the exhaust pipe and any sharp edges. This harness may be cut to length. Replacement terminals are provided with the Pro-Flo system. Cover the connection to the positive terminal with the sleeve and tie wrap provided. Refer to the MAIN SYSTEM HARNESS section of this manual for details.

16. Before starting the engine, turn the ignition key to the ON position 4 or 5 times to prime the electric fuel pump, fuel lines, and fuel rails. You should hear the pump run for approximately 2 seconds each time. Check the entire fuel system for leaks. Refer to the SYSTEM START-UP section of this manual for details.

©2008 Edelbrock Corporation

INDUCTION SYSTEM

The Edelbrock Pro-Flo system delivers fuel and air to the engine via the induction system consisting primarily of a manifold, 4-barrel air valve, fuel rails, and fuel injectors. The induction system is fully assembled, tested, seal checked, and flowed at the factory and is as easy to install as a manifold. DO NOT DISASSEMBLE any of these components during installation, unless instructed to do so in this manual.

FUEL RAILS

The extruded aluminum rail assembly routes the high pressure fuel to the injectors. Aluminum rails have an advantage over soft rails both in terms of style and safety.

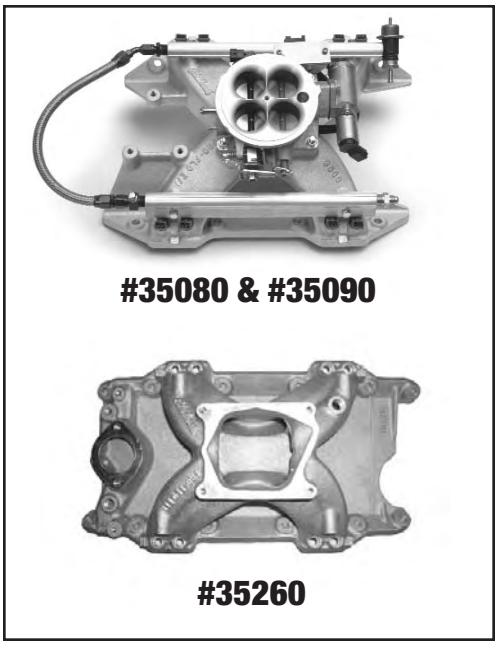

#35080 & #35090

#35260

INTAKE MANIFOLD

The new Edelbrock manifold used with the Pro-Flo system is very similar to the successful Victor Jr. high-performance single-plane manifold, but has been designed specifically for electronic fuel injection applications.

4-BARREL AIR VALVE

The Pro-Flo system uses a progressive linkage valve body with four throttle blades arranged in a conventional 4-barrel pattern, with staged secondaries. The air valve can flow up to 1000 cfm at 1.5" of mercury when wide open.

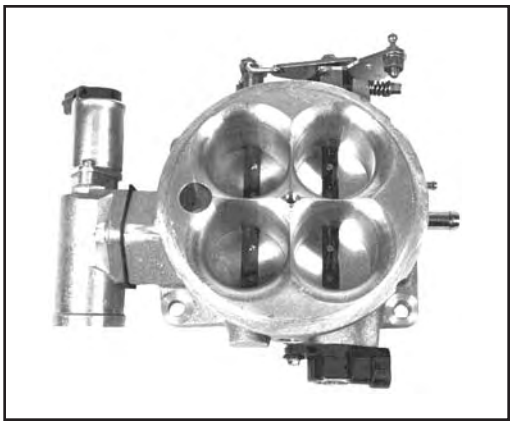

FUEL INJECTORS

The Pro-Flo #35080, #35090 & #35260 systems use high impedance pintle-type fuel injectors. The injectors are capable of flowing 29 lbs./hr. or 35 lbs/hr. at 50 psi, depending on the system. The injectors mount directly onto the manifold, one at each port, for fuel delivery that is precisely controlled and instantaneously injected.

©2008 Edelbrock Corporation

PRE-INSTALLATION

Before installing the induction system, take the following steps to ensure successful installation and performance

1. Check all components thoroughly for damage.
2. Make sure all throttle linkages open entirely and close freely.
3. Make sure all fuel inlet and vacuum ports are free from packing material.
4. Check the installation kit for proper parts.

REMOVING THE STOCK CARBURETOR AND MANIFOLD

1. Disconnect battery.
2. For ease of installation, keep all parts in order.
   CAUTION: Do not remove manifold if engine is hot.
3. Drain radiator coolant (radiator drain plug is typically located on lower right facing engine).
4. Remove gas cap to relieve pressure. Disconnect fuel line and plug. Replace gas cap.
5. Disconnect all linkage from carburetor such as throttle, throttle springs, transmission, cruise control and automatic choke.
6. Tag and remove coil wires and sensor wires.
7. Remove previously marked vacuum lines.
8. Remove radiator hose, thermostat housing and thermostat, if mounted on manifold.
9. Remove all brackets from the manifold.
10. Loosen or remove valve cover bolts for manifold removal and replacement. It may be necessary to replace valve cover gaskets, if broken, to prevent oil leakage.

PORT SURFACE CLEANING

When cleaning old gaskets from head surfaces, lay rags in the lifter valley and stuff paper into the ports, to prevent pieces of the old gasket from falling into ports and combustion chambers. When clean, remove paper, making sure that all particles fall on the rags in the lifter valley. Remove rags, and wipe surfaces clean with rags soaked in lacquer thinner in order to remove oil or grease. NOTE: This procedure is necessary to ensure proper sealing.

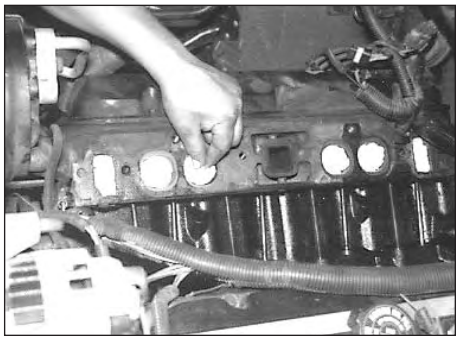

INSTALLING FITTINGS, PIPE PLUGS, AND STUDS

Do not over-tighten or cross-thread fittings, pipe plugs, studs, or bolts in your aluminum manifold. Damage to threads or a cracked mounting boss may result unless caution is used when installing accessories.

Use high quality pipe thread sealant on all threads. Install fittings from your stock manifold.

©2008 Edelbrock Corporation

GASKET SURFACE PREPARATION

CAUTION: Replace all gaskets as recommended. Do not use race-type non-embossed gaskets for street applications. Due to material deterioration under street driving conditions, internal vacuum and oil leaks may occur. We recommend Fel-Pro Printoseal gaskets #1213 (340-360) and #1215 (440) or equivalent. Do not use Fel-Pro Permatorque Blue gaskets, which are designed for use on stock cast iron intake manifolds only.

1. **Remove Fuel rails and Injectors**: Fuel injectors and fuel rails are assembled on the manifold and pressure tested. Installing the intake requires the removal of both fuel rails. Remove the two 1/4" bolts per fuel rail and flat washers. Carefully remove one fuel rail at a time and any remaining injectors from intake manifold.
2. Check gaskets on head surface and manifold to make sure they are correct. Embossed side faces up.
   NOTE: In some cases, there may be a different right and left side gasket. Make sure both are placed correctly.
3. Coat head surface and and the cylinder head side of each gasket with Edelbrock Gasgacinch #9300.
4. Apply Loctite 598 OEM High Temperature Silicone Gasket around water passages on head surface (318-340-360 only).
5. Gaskets and surface will become tacky to the touch within a few minutes. Carefully place gaskets on head surface, aligning ports and bolt holes.
6. Edelbrock recommends the use of Loctite 598 OEM High Temperature Silicone Gasket instead of end seal gaskets. Apply a 1/4-inch thick bead of sealant across each end seal surface, overlapping the intake gasket at the four corners (318-340-360).
   NOTE: Use the recommended silicon sealer. Others may damage the O2 sensor. This method eliminates end seal slippage and deterioration.
7. Apply RTV gasket sealer around water passages on the manifold.
8. Surfaces will become tacky to the touch within a few minutes.

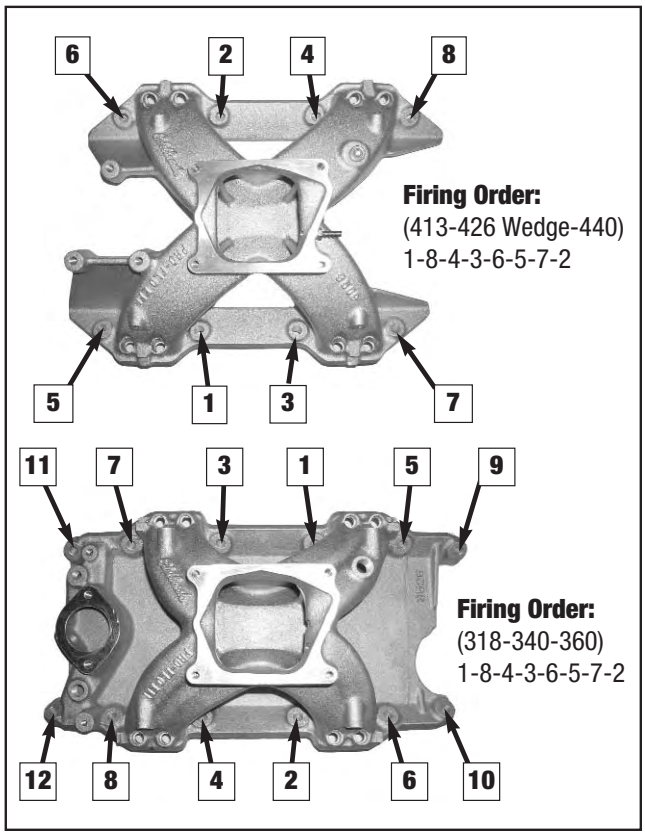

INDUCTION SYSTEM INSTALLATION

1. Carefully position manifold and air valve on engine, centering bolt holes with the bolt holes in the head.
2. Apply thread sealer or Teflon tape to bolt threads where exposed to water or oil.
3. Hand tighten all bolts.
4. Torque all manifold bolts to 25 ft/lbs. Torque in the sequence as shown.
5. **Install Fuel rails and Injectors**: Lubricate injector O-rings (top and bottom) with O-ring type lubricate before sliding them into fuel rails. Push injectors into rails, making sure that the electrical connectors on injector bodies face up. Place fuel rail with pressure regulator on passenger's side with regulator toward rear of engine. Push down with enough force to seat lubricated O-rings in manifold, making sure not to damage O-rings. Once installed, secure rails with 1/4" bolts and flat washers to 8 ft-lbs(96 In-lbs). When properly installed, the injectors should rotate freely by hand.

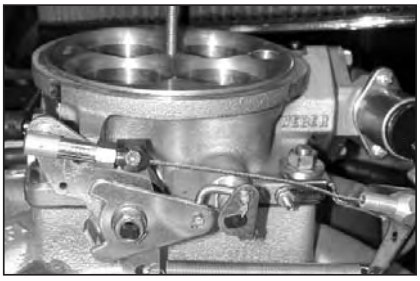

6. Re-connect throttle linkage and springs, transmission, cruise control, and fuel lines. Check all linkage for smooth throttle operation from idle to Wide Open Throttle.
   Note: Do not install with a throttle rod, use a cable actuated throttle. Throttle rods will cause engine surge as the engine moves in its mounts.
7. Re-tighten the valve cover bolts.

©2008 Edelbrock Corporation

SENSORS

The Edelbrock Pro-Flo system interprets overall engine operating conditions and fuel/spark requirements based on readings from sensors that measure specific engine conditions. These sensors, with the exception of the O_2, are designed as an integral part of the induction system and require no installation. The O_2 sensor must be installed on the exhaust pipe near the engine with a welded fitting.

The Pro-Flo system includes five sensors:

1) Manifold Absolute Pressure
2) Manifold Air Temperature
3) Coolant Temperature
4) Throttle Position
5) Exhaust Oxygen (O_2)

MANIFOLD AIR TEMPERATURE SENSOR

The Manifold Air Temperature sensor, is a thermistor device which measures air temperature. This sensor must be installed into the air cleaner base. Drill the air cleaner base with a 3/4" drill, deburr any sharp edges, install MAT sensor grommet, then slide sensor into grommet.

NOTE: The systems that have the MAT sensor in the intake plenum area, can be moved to the air cleaner if necessary to obtain additional vacuum ports.

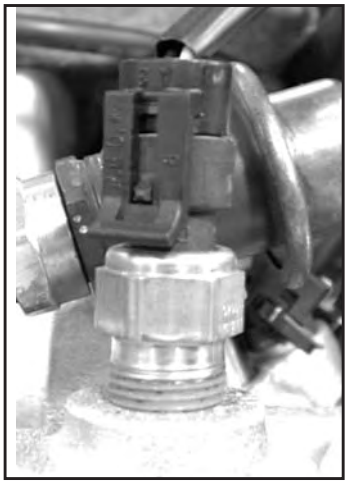

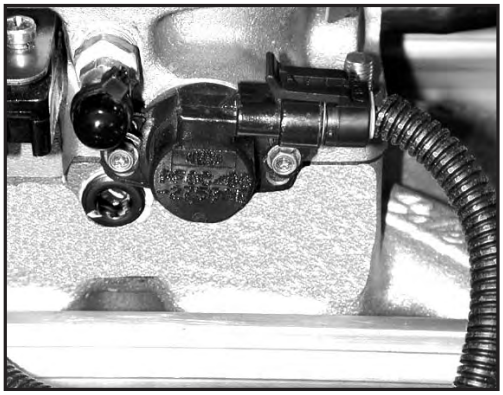

COOLANT TEMPERATURE SENSOR

The Coolant Temperature Sensor is a thermistor device like the Manifold Air Temperature sensor. Resistance varies as coolant temperature rises and lowers. The Coolant Temperature Sensor is located at the front of the manifold on the driver's side.

THROTTLE POSITION SENSOR

The Throttle Position Sensor, an integral part of the Pro-Flo throttle body, measures throttle angle. This sensor requires adjustment as described in the SYSTEM START-UP section of this manual.

MANIFOLD ABSOLUTE PRESSURE SENSOR

The Manifold Absolute Pressure sensor, mounted on the air valve with a bracket, converts air pressure (load) in the manifold, to an analog signal sent to the ECU. For more information on Manifold Absolute Pressure, refer to the section on Speed Density Electronic Engine Management.

©2008 Edelbrock Corporation

OXYGEN (O_2) SENSOR

An oxygen sensor, installed on the header collector pipe, measures exhaust gas oxygen content and is used by the ECU to manage fuel delivery under closed loop control. Installing the sensor requires drilling a 1/2-inch hole in the passenger-side header collector. The sensor is held in place with the provided fitting which must be professionally welded into place. The red-lean/green-rich light on the Calibration Module is also controlled by the O_2 sensor. The O_2 sensor is connected to the Main System Harness by Connector J18. For installation details, refer to the FUEL SYSTEM section of this manual.

NOTE: The Pro Flo system is capable of using either a narrow band or wide band O2 sensor. The difference between a narrow band and wide band O2 sensor is the range over which the sensor is accurate. A narrow band sensor is basically a switch that only tells the ECU if the air fuel ratio (AFR) is richer or leaner than 14.7 to 1. A wide band sensor/controller typically has a linear voltage output that is accurate over a range of 10 to 20:1 AFR. The included wideband sensor calibration is for use with the Dynojet Wide Band Commander Air Fuel Ratio Monitor. See http://www.widebandcommander.com for more information. To select the wideband option, install the included O2 select jumper as shown below. To use the default narrow band option, leave the jumper off. A dust cap is provided for protection when the connector is not used. The wideband sensor input is located on pin 31 of the larger 34 pin main ECU connector. Using the supplied ECU terminal pigtail, insert the pigtail by depressing the white terminal lock on the connector. Insert the terminal into pin 31, then close the terminal lock by pushing it in the other direction. Connect the wideband controller output to the pigtail.

O_2 SENSOR INSTALLATION

NOTE: *It is recommended that the O_2 sensor installation be performed by a professional muffler shop.*

1. Double check header gaskets, replacing if necessary.
2. Drill a 1/2-inch to 9/16-inch hole in the passenger-side header collector reducer, as close to the header flange as possible. (1" to 3" away)

   NOTE: *Before drilling, make sure the O_2 sensor will be mounted horizontally and within reach of the harness connector. Check to ensure adequate clearance for the sensor, taking into consideration engine movement.*

3. Fit the provided fitting into the hole in the exhaust pipe and weld into place.
4. Once it has been welded into place, clean the threads in the center of the fitting. If your exhaust is coated tap bung threads to ensure a good ground for the 0/2 sensor.
5. Thread the O_2 sensor into the fitting. A high-heat anti-seize compound is included and needs to be applied to the sensor threads.

   NOTE: *The O_2 sensor has 18mm x 1.25 spark plug threads.*

6. Attach the O_2 sensor to the main system harness. Refer to the MAIN SYSTEM HARNESS section of this manual.

   NOTE: *UNLEADED FUEL MUST BE USED ONCE THE O_2 SENSOR HAS BEEN INSTALLED.*

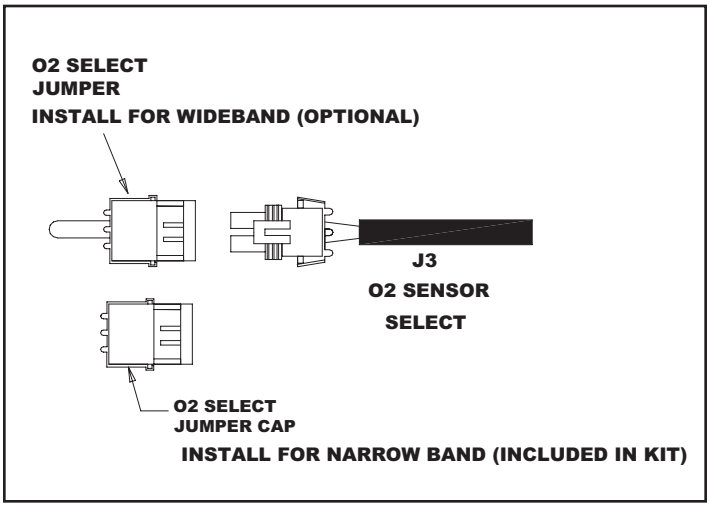

©2008 Edelbrock Corporation

INSTALLATION

1. Inspect the Main System Harness, making sure that all connectors and grounds are properly in place.
2. Because the harness extends from the engine compartment into the passenger compartment, a hole must be drilled in the firewall on the passenger side. Cut two overlapping 1 1/4-inch holes on a 1-inch center in the firewall. Saw the pointed edges to create an oval-shaped hole.

   NOTE: *An alternative to this method is to cut a single 1 3/4 inch hole.*
3. Extend the fuel pump relay, ECU connector, and Calibration Module relay through the firewall hole into the passenger compartment.

   NOTE: *The T-connectors at the joints of the Main System Harness are closed by snap fasteners which can be opened by hand or with a flathead screwdriver. Once open, the T-connectors can be rotated for ease of installation, if necessary.*
4. The aluminum plate included on the harness mounts over the firewall hole using four hex head sheet metal screws.

   NOTE: *Start the screw holes with a pointed punch or small drill.*
5. The wire harness is assembled with the aluminum plate flush against a T-connector. The black plastic casing on the wire harness can be cut to allow the plate to slide up the harness to the correct location. Once the harness is in place, the casing should be reattached on both sides of the firewall.

   CAUTION: *When feeding the wire harness through the firewall, be careful to not damage the wires against the cut sheet metal.*
6. A rubber grommet is provided to protect the wires in the aluminum plate. Use RTV to seal the plate to the firewall.
7. Install all connectors according to the list and diagrams. The harness has been designed so that each connector is unique and will fit only to its correct match.

The Throttle Position sensor attaches to the harness with Connector J5.

The Manifold Absolute Pressure sensor attaches to the harness with Connector J17.

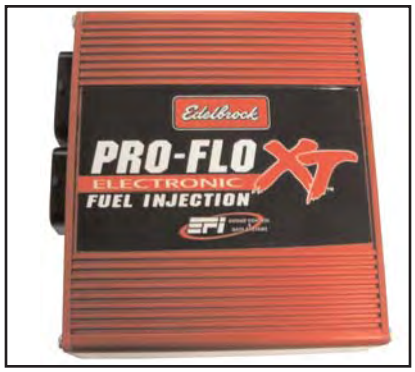

The Coolant Temperature sensor attaches to the harness with Connector J15.

ELECTRONIC CONTROL UNIT / SYSTEM ECU

The Electronic Control Unit (**ECU**) must be mounted away from moisture, excessive heat, or vibration. Underneath the dashboard on the passenger side, or behind the glove box are recommended locations.

The Manifold Air Temperature sensor attaches to the harness with Connector J16.

©2008 Edelbrock Corporation

MAIN SYSTEM HARNESS

This diagram illustrates the entire Pro-Flo Main System Harness.

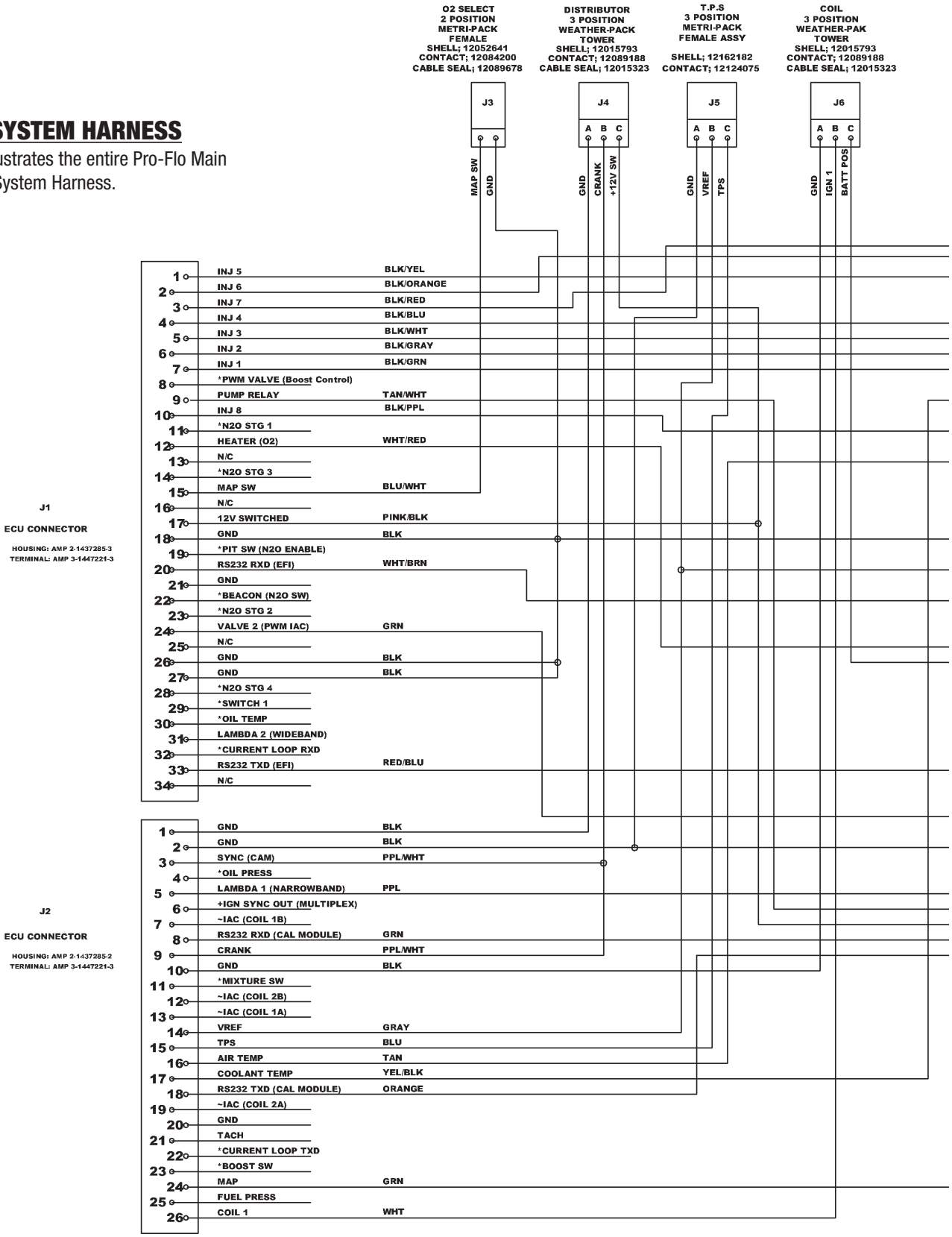

*** PRO FLO XTR SYSTEMS ONLY**

~ PRO FLO XT/XTR SYSTEMS ONLY

+ FOR USE WITH MULTIPLEX COIL DRIVER ONLY

©2008 Edelbrock Corporation

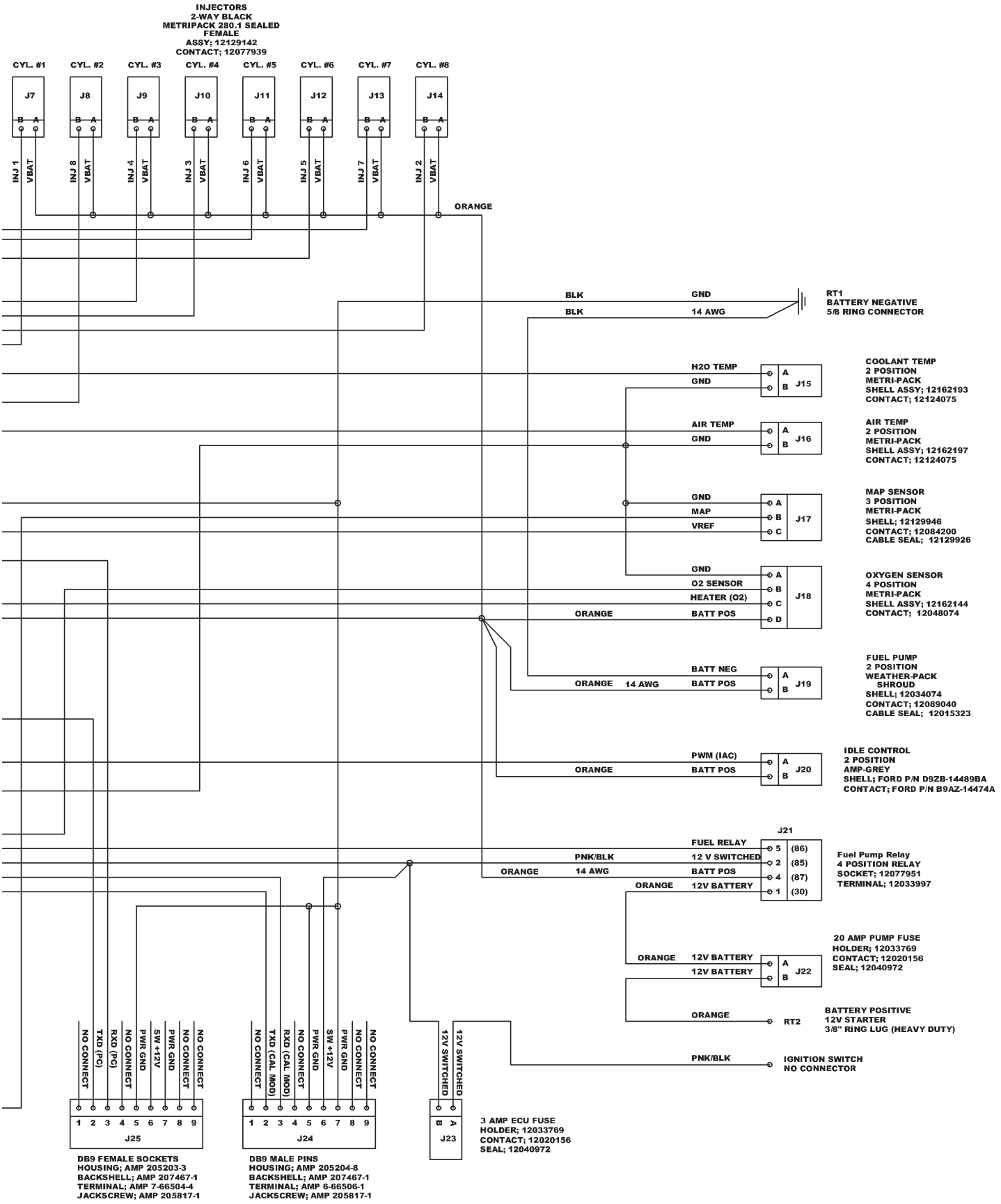

©2008 Edelbrock Corporation
Brochure No. 63-0229

HARNESS LAYOUT

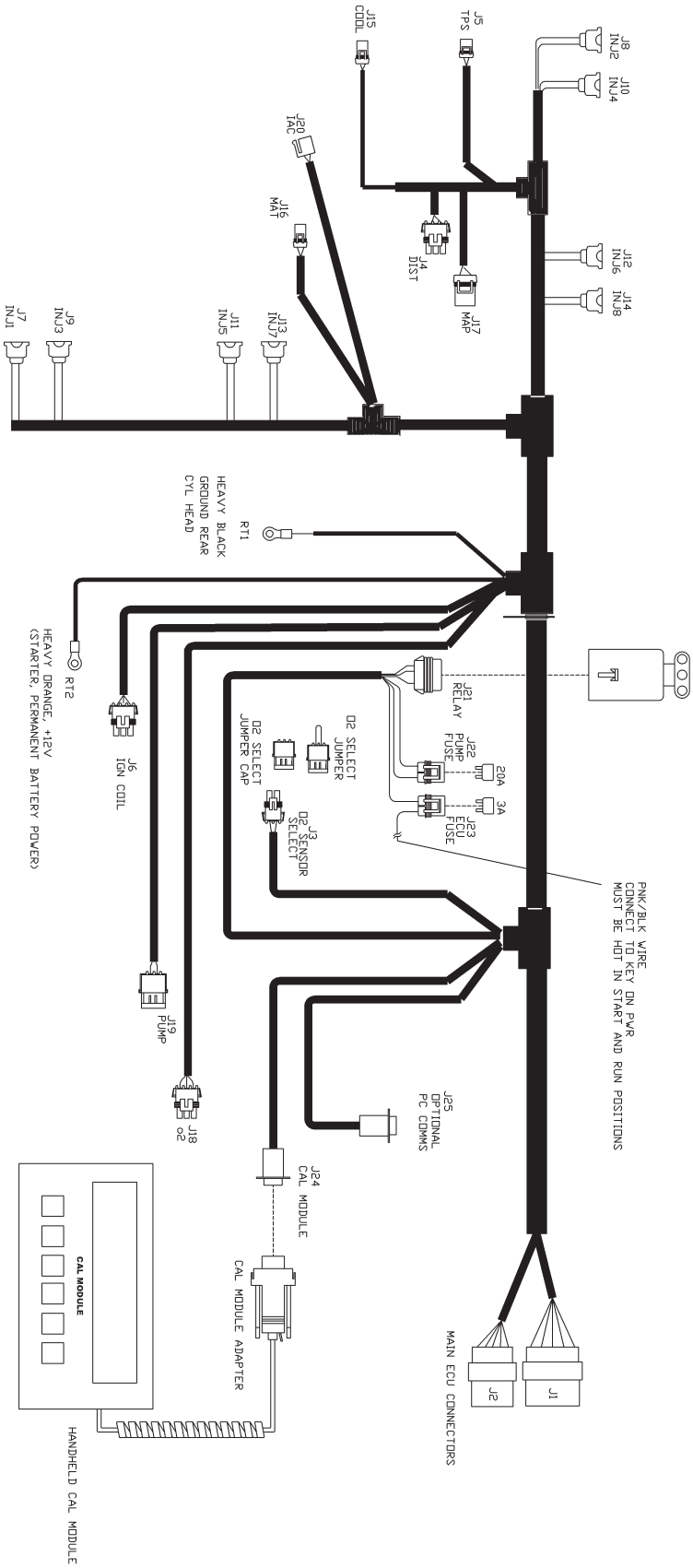

©2008 Edelbrock Corporation
Brochure No. 63-0229

The fuel injector connectors are identical, but they are placed in logical sequence. Refer to the diagram when installing the harness connectors to the fuel injectors. In addition to the Main System Harness, the Pro-Flo system includes these shorter harnesses:

A. Ignition Coil to Main System Harness
B. Fuel pump to Main System Harness

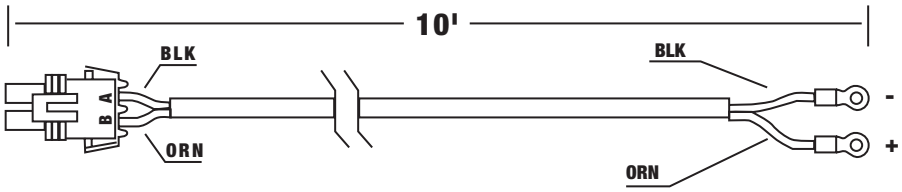

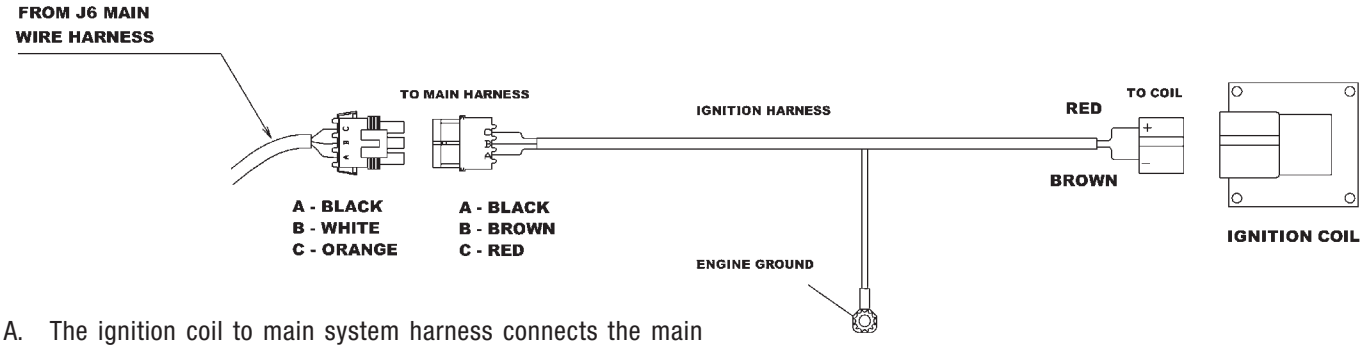

A. The ignition coil to main system harness connects the main harness to the ignition coil through connector J6. The ring terminal included in the short ignition harness must be grounded to the engine. Cylinder head accessory bolt holes or intake manifold bolts work well. The coil connector attaches to the ignition coil. The red wire is positive and the brown wire is negative.

B. The fuel pump harness attaches to the main harness at connector J19. The ring terminals attach to the positive (+) and negative (-) terminals on the fuel pump. A sleeve and tie-wrap are provided to fit over the positive terminal once the connector is installed. This sleeve prevents the clamp from shorting to the fuel pump terminals.

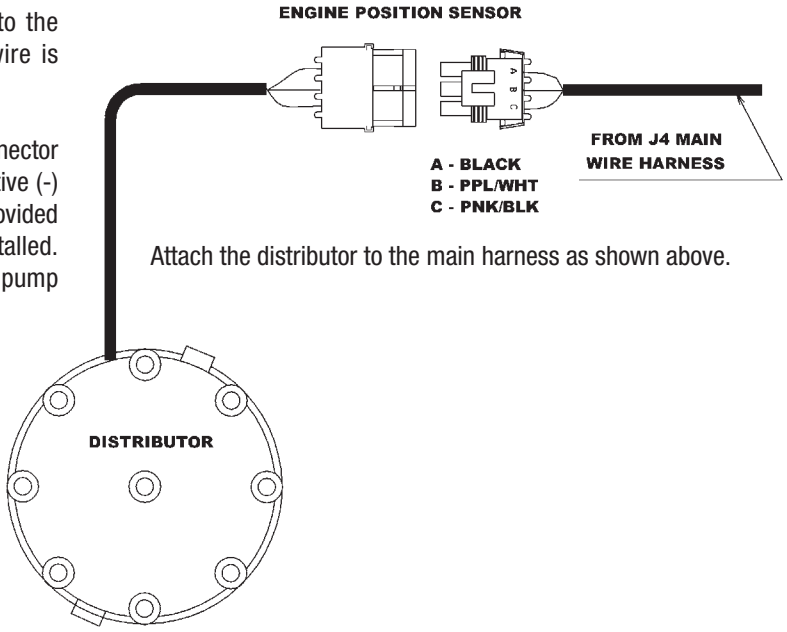

Attach the distributor to the main harness as shown above.

©2008 Edelbrock Corporation

IGNITION SYSTEM

DISTRIBUTOR TESTING

1. Install the ECU and wiring harness and make all connections except the distributor and ignition coil.

2. Disconnect electrical connections at the fuel pump. Unplug the 10-foot fuel pump harness from the Main System Harness. Refer to the MAIN SYSTEM HARNESS section of this manual for details.

3. Turn the key to the ON position without starting the engine. Check the Idle Air Control (IAC) solenoid clicks on and off for approximately 2 seconds.

4. The Pro-Flo Calibration Module will receive power and display an RPM: 0 reading, among other parameters.

5. Connect the distributor to the wiring harness and spin the distributor gear by hand. If the distributor sensor is operating properly, the main fuel pump relay will click on. When the distributor stops spinning, the Calibration Module may display NO COMMUNICATION for approximately 2 seconds. This is normal and indicates that the ECU is waiting for the next distributor signal before the allowed time expires.

6. If the relay clicks on as indicated in step 5, re-install the distributor.

INSTALLING THE DISTRIBUTOR

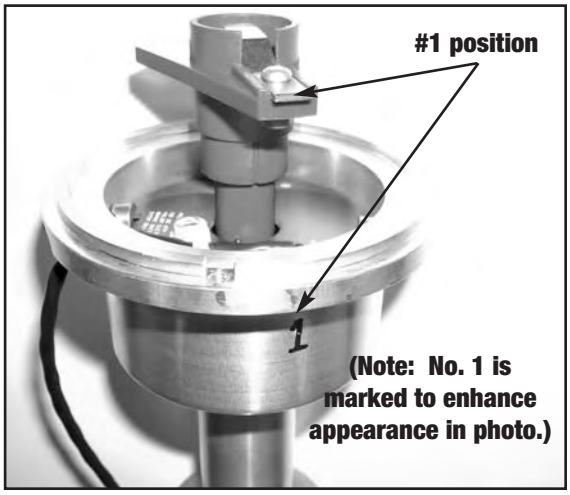

1. Rotate the crankshaft until cylinder #1 is coming up on the compression stroke. Stop turning when the crankshaft is 10° BTDC.
2. Rotate the distributor shaft until the rotor points to the #1 on the distributor housing. The #1 plug wire will attach to the tower on the cap directly above the #1 on the distributor housing.
3. Install the distributor so that #1 on the cap is positioned where #1 was on your previous distributor. You may need to remove and reinsert the distributor a few times to align the distributor. Make sure that the distributor seats down completely and has fully engaged the oil pump drive.
4. Lift the rotor by hand to make sure that there is adequate endplay. Lack of endplay indicates that the rotor shaft is bottomed out on the oil pump shaft.
5. Lightly tighten the hold down clamp so that the distributor can still be turned to determine final setting when checking the timing.
6. Re-attach the distributor cap. Make sure the rotor is still pointing to #1.
7. Install your spark plug and coil wires and connect the distributor to the MAIN SYSTEM HARNESS.

NOTE: DO NOT use a Solid-Core type spark plug wire set, such as copper core, etc. You must use a suppression type spark plug wire. Failure to use the correct wires will cause electrical interference with the engine control unit.

©2008 Edelbrock Corporation

ADDING AFTERMARKET IGNITION

If you are wishing to use a MSD 6AL or MSD 6-Digital ignition with your Pro-Flo fuel injection, follow the wiring diagram below.

NOTE: *When installing the MSD box, keep the red battery lead and the main MSD box AWAY from the ECU and it's wires. Failure to do so will cause serious communication and running issues.*

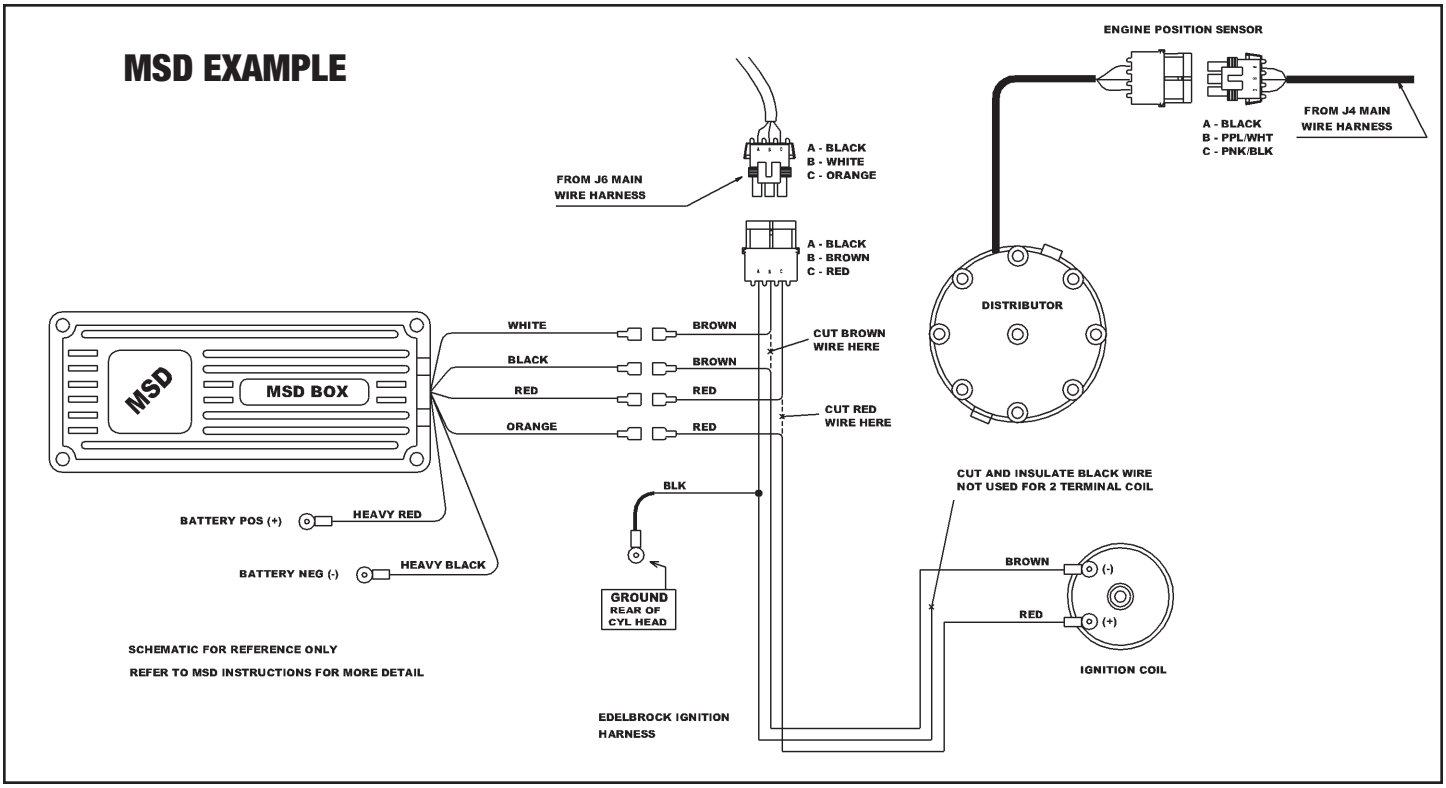

OTHER APPLICATIONS

The Pro-Flo system has been designed and calibrated specifically using the 340 small-block and 440 big-block Chrysler engines with large-valve style cylinder heads (such as Edelbrock's Performer RPM Street Cylinder Heads with 2.02" intake valves on the 340, and 2.14" intake valves on the 440) and tubular headers as a baseline.

It is unlikely that every engine on which the Pro-Flo system is installed will match this baseline combination. The system can be used with similar applications, as long as the correct chip matching your cam profile is installed in the computer and necessary fuel calibration adjustments are made. If your Chrysler engine is not a 340 or 440, does not have headers, and uses stock style cylinder heads, it may require more tuning adjustments. For further information refer to the SYSTEM SET-UP SECTION of the Owner's Manual.

If you are running small-valve heads and/or you are not using tubular headers, it may be necessary to reduce fuel at WOT from 4000 rpm and up. Refer also to the SYSTEM SET-UP section in the Owner's Manual. Use the FUEL @ WOT screens (located under FUEL MODIFIERS) to adjust the fuel at each available RPM.

WARNING: Watch the Rich/Lean light on the Calibration Module. If the light indicates a lean condition (red) for more than a fraction of a second at 0-6" vacuum or at WOT you are too lean for safe engine operation at full load.

©2008 Edelbrock Corporation

INSTALLING THE SOFTWARE

The software package included with the Pro Flo kit is required to load the initial calibration file into your ECU. An optional software package called *System Editor* is also available on the supplied CD-ROM.

To install the software, load the supplied CD into your PC's CD drive. The installation routine should auto run. Follow the onscreen prompts to install the software.

eFlash is a stand alone system that can be used to load calibration files or different firmware versions onto an ECU using any Windows compatible PC. A laptop is not required. The system includes a DC power source that can be plugged into any standard wall socket. It will provide power to the ECU and allow two way communication without having to install the ECU in the vehicle. Tuning can then be done using the handheld module. In addition to allowing flash programming, eFlash has several additional features that can be useful.

- It displays all ECU data real time in one consolidated view.
- It displays all calibration module trims and modifications in one view so you can see them at a glance.
- It allows Edelbrock tech support personnel to view your ECU data real time using the iLink feature (internet connection required)
- It allows you to send your existing calibration file to Edelbrock tech support personnel using the iLink feature (internet connection required).
- It allows the user to perform software updates if necessary.

Shortcut to eFlash

To open the eFlash utility double click on the eFlash desktop icon.

To connect the ECU to your PC, plug the 34 pin ECU connector into the ECU. The connector will only plug in one way. Connect the DB9 serial connector to your PC either directly or through an extension cable (not included). Plug the AC Power Adapter into a standard wall socket.

NOTE: A USB to Serial converter is included with the kit to be used if your PC does not have a 9 pin serial port. Connect the USB end of the adapter to your PC and the serial port (9 pin) end to the power adapter harness. Follow the instructions included with the USB adapter to install the appropriate drivers. Go to File - Port Settings in eFlash and select the com port that matches the location of the adapter.

Confirm that the ECU is connected and communicating with eFlash. "ECU Connected" should be displayed in the lower left hand corner as shown to the right.

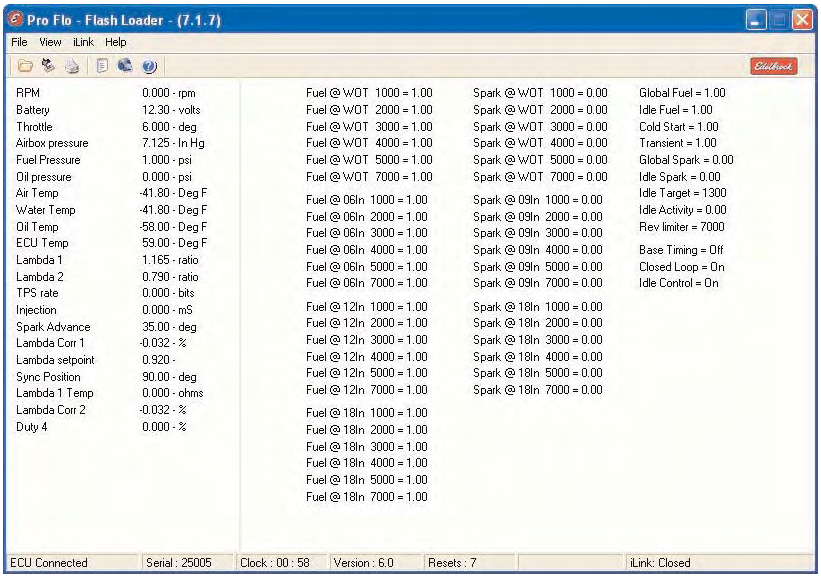

©2008 Edelbrock Corporation

SELECTING THE PROPER CALIBRATION

Application	Kit Part No.	Calibration No.	Intake @ .050”
AMC			
343, 390 Performer RPM	35300	3548	Stock to 224°
304, 360, 390, 401 Performer RPM	35310	3549	224°-Greater
Chevrolet			
S/B Performer	35030	3512	Stock-220°
S/B Performer RPM	35000	3514	220°-Greater
S/B Performer RPM w/ Vortec Heads	35070	3514	200°-Greater
B/B Performer	35510	3552	Stock-224°
B/B Performer RPM	35500	3554	224°-Greater
Chrysler			
S/B Performer	35260	3545	Stock-224°
S/B Performer RPM	35260	3547	224°-Greater
B/B Performer RPM	35080/35090	3542	Stock-224°
B/B Performer RPM	35080/35090	3543	224°-Greater
Ford			
289-302 S/B Performer	35210	3522	Stock-224°
289-302 S/B Performer RPM	35210	3523	224°-Greater
351W S/B Performer RPM	35410	3544	Stock-224°
351W S/B Performer RPM	35410	3546	224°-Greater

NOTE: The intake @.050” column represents the camshaft intake lobe duration in degrees measured at 0.050” lift. This data is standard and provided with all camshaft specifications. The intake duration has a large influence on the amount of vacuum your engine produces and will significantly affect the overall tuneup. Starting with the correct calibration file will reduce the amount of tuning needed.

To load a new calibration file into the ECU, go to File - Load New Map

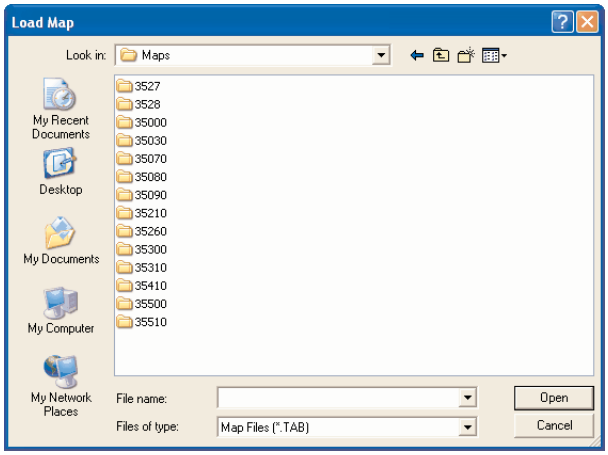

The calibration files are saved in folders identified by kit part number. Double click on the folder with your kit part number, then select the calibration that corresponds to your camshaft duration. The eFlash utility will load the calibration into your ECU. Follow the on screen prompts to complete the process. When finished, close the eFlash program and disconnect the power adapter connector from the ECU. You are now ready to connect the ECU to the vehicle harness. Additional information can be found in the help file included in the software.

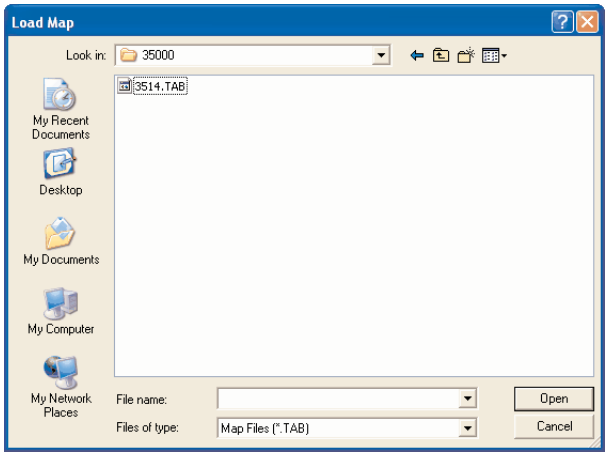

©2008 Edelbrock Corporation

SYSTEM START-UP

Once the Edelbrock Pro-Flo system has been installed, there are a few procedures you must follow to break-in the system. Carefully performing these break-in procedures will ensure best results and optimal performance.

Use this checklist to double-check the following areas **BEFORE** starting the car:

- ❑ Has the battery been reconnected?
- ❑ Has the radiator been refilled with coolant?
- ❑ Has the gas tank been refilled?
- ❑ Has the oil been replaced?
- ❑ Have all linkages been reconnected?
- ❑ Have all wiring harness connectors been connected?
- ❑ Have all fuel lines been reconnected?
- ❑ Has the exhaust system been completely re-installed?
- ❑ Has the O_2 sensor been installed and connected?

Priming The Fuel Pump

Before the engine is started, the fuel pump must be primed to pressurize the system and purge the fuel line of all air.

1. Turn ignition key to the ON position. You should hear the fuel pump go on. It will pump for 2 or 3 seconds and disengage.
2. Turn the key to the OFF position for 1 second.
3. Turn the key to the ON position again. The pump will go on for another 2 or 3 seconds.
4. Repeat this procedure until the pump has been cycled three or four times, and is primed. The tone of the fuel pump will change when all air is out of the fuel system.
5. If there is no tone, or no change in tone, the system is not priming. Check the entire fuel system for leaks, from the fuel tank to the injectors.

Testing The Sensors

Before starting the engine, test all sensors.

1. Turn the key to the ON position with the Calibration Module connected. The display will read:

RPM: 0	**FUEL: 0.0 mS**
VAC: 0.0” Hg	**SPK: 10°**

NOTE: *A vacuum reading of other than 0.0” Hg may be displayed depending upon barometric pressure and air temperature. At extreme altitude, the vacuum reading may be as high as 5.0” Hg.*

2. Push the UP ARROW key once to display.

TH2O: 76°F	**TPS: 13°**
TAIR: 77°F	**Volt: 12.0**

NOTE: *The water and air temperatures displayed will vary depending on ambient conditions. The system voltage will vary depending on the condition of the battery.*

3. Move the throttle to test the Throttle Position Sensor (TPS). The TPS reading should vary depending on throttle angle.

4. If the calibration module goes blank while cranking, the system is losing power. Check the Pink/Black wire attached to the 3 Amp fuse for +12V power with the ignition in the crank position and the run position for proper operation.

©2008 Edelbrock Corporation

Timing Adjustment

Use a timing light to re-time your engine. The following steps must be performed after the induction system has been installed and the distributor has been converted and re-installed. Refer to the INDUCTION SYSTEM and IGNITION SYSTEM sections of this manual.

1. Remove spark plug from Number One cylinder.
2. Remove coil wire from distributor and ground it.
3. THIS STEP REQUIRES TWO PEOPLE OR USE OF A REMOTE STARTER SWITCH. While one person rotates the engine by slowly bumping the starter, the other holds his finger over the Number One plug hole until compression is felt.
4. Continue to bump starter until timing mark on the crankshaft pulley shows approximately 10 degrees Before Top Dead Center.
5. Position rotor to approximately align with the Number One cylinder plug wire terminal in distributor cap.

Setting Base Spark Advance

Use a timing light and the Pro-Flo Calibration Module to accurately set timing.

1. Start the engine
2. The Calibration Module screen will display this screen:

   RPM: ø FUEL: 0.0 ms
   VAC: 0.0"Hg SPK: 10°

3. Press the DOWN ARROW key once to reach this screen:

   <MISC.MODIFIERS>
   ENTER to select

4. Press the ENTER key to display this screen:

   Target Idle RPM:xxxx
   MODE ↓↑ = SCROLL ENTER

5. Press the UP ARROW key six (6) times until the module displays this screen:

   Base Tim'g set: OFF
   MODE ↓↑ = SCROLL ENTER

6. Press the ENTER key. Press either ARROW key and the screen will display Base Tim'g set: ON.
7. Set the base timing using a timing light and engine running at 1500rpm. Turn the distributor until 10° advance is set.
8. Press the UP ARROW or DOWN ARROW key to turn Base Tim'g set to OFF.

   WARNING: DO NOT DRIVE THE VEHICLE WITH THE BASE TIM'G SET ON. SERIOUS ENGINE DAMAGE MAY RESULT

   NOTE: If you use an advance-type timing light, the degrees advance shown on the Calibration Module (SPRK:) should always agree with the actual reading at the crank with the timing light.

9. Press the MODE key. You can now leave this screen using the UP ARROW or DOWN ARROW keys.

Idle Adjustment

This procedure is a general recommendation, intended to help you tune up your Pro-Flo® system.

NOTE: *In manual transmission cars, this procedure must be followed with the car in Neutral and with the clutch pedal pressed. In automatic transmission cars, this procedure must be followed with the car in Drive and with the brake pedal pressed.*

©2008 Edelbrock Corporation

Idle Calibration Procedure

- Prior to idle calibration, you need to have completed the "System Start-Up" procedure
- Warm up engine to at least 175°F.

Idle Control

- Using the calibration module, Select MISC. MODIFIERS and, Set Idle Control OFF.

Set Idle Mechanical Stop

- Set the mechanical stop screw so that idle speed in park/neutral is 50-100 RPM higher than you want the engine to actually idle in gear with the idle control turned on. Typically 600 - 1000 RPM depending on the installed camshaft.
- We find 650 RPM a good idle for our #3522 (with Performer-Plus camshaft) calibration.

Set Throttle Position Sensor

- Loosen the two Throttle Position Sensor (TPS), mounting screws, and rotate the TPS sensor to a setting of **13 degrees** as observed on the Calibration Module. This setting must be at 13 degrees after the idle adjustment is completed.

Set Idle Fuel Modifier and Idle Spark Modifier

- Using the calibration module, Select MISC. MODIFIERS and adjust Idle Spark and fuel Modifiers to obtain best idle quality. Idle quality will vary with engine design. Fuel and Spark setting will interact, particularly when you approach best settings.
- You must establish a smooth idle prior to using Idle Control. Otherwise, the RPM will surge when Idle Control is turned on.

Save Calibration

- Re-check that the TPS setting is 13 Degrees.
- Using the calibration module, Select MISC. MODIFIERS
- Set IDLE CONTROL ON. Set TARGET IDLE to the same RPM established by the idle stop screw.
- Save calibration settings to “A”

Idle Speed Activity

- Displayed on the calibration module, (Second Data Screen). The displayed value represents the amount of air that is bypassing the throttle blades of the air valve, Normal values range from 5% to 75%. This ensures that the computer can increase or decrease the idle air flow to control idle speed.
- If your have established a "good" idle set up, the RPM will remain nearly constant between in-gear and out-of-gear. The Idle Speed Activity will change 10- 30% as it adjusts the idle speed.
- The value of Idle Activity is 20% when Idle Speed Control is off.

Idle Speed Activity Modifier

- This function is locked out when Idle Control is off as indicated by "XXXX" in the Target idle display on the Calibration Module Display.
- The Idle Speed Activity Modifier biases the Idle Activity duty cycle, +/50%, this has the effect of changing RPM control loop response time.
- We recommend that this value be set to zero modification except in extreme cases.

©2008 Edelbrock Corporation

ELECTRONIC ENGINE MANAGEMENT

The Edelbrock Pro-Flo system uses the Speed-Density method of electronic engine management, in which fuel and spark requirements are based on engine speed (RPM) and engine load (manifold pressure and temperature).

The Electronic Control Unit (ECU) receives signals regarding engine speed (from the distributor), and the three load factors consisting of coolant temperature (ECT), Manifold Absolute Pressure (MAP) and air temperature (MAT). Once the ECU has determined the engine operating point (RPM and Load factor), it uses tables programmed into it to instantly calculate correct spark advance and injector pulse width.

The Pro-Flo system displays vacuum rather than the less-familiar manifold pressure. This vacuum reading is based on the following SAE standard atmosphere:

Barometer 29.5 in Hg
Temperature 77°F

Because of this, the vacuum figures displayed on the Calibration Module may differ from the vacuum indicated by a true vacuum gauge, particularly at extreme high or low altitude.

FUEL MODIFIER TABLE

FUEL MODIFIER TABLE

LOAD	RPM 1000	2000	3000	4000	5000	7000
WOT						
6"						
12"						
18"						

SPARK MODIFIER TABLE

SPARK MODIFIER TABLE

LOAD	RPM 1000	1750	2500	3500	4500	6000
WOT						
9"						
18"						

The Calibration Module allows you to modify the fuel and spark tables at various engine speeds and levels of vacuum. These tables may be used for recording your modifications to the base table with your own fuel pulse width and spark advance figures.

©2008 Edelbrock Corporation

PRO-FLO QUICK TUNING GUIDE

This guide is based on our simple graph that shows the 24 fuel cells that you can tune in to result in a clean and powerful engine. We recommend when you have your Pro-Flo installed, you have the idle tune up completed and then drive the vehicle to determine what amount of tuning is needed for general driving. If the unit is driveable, this is the method to use for ease of tuning. On page 27 of this installation manual, there is a fuel grid that can be used as the map on which to locate and then tune any drivability problems. Simply drive the vehicle and note any areas that have problems. Circle those areas as a baseline.

When circling the area where a problem exists, you are circling the RPM and Vacuum reading that is present when the problem occurs. Note whether it is running rich (green light) or lean (red light) at each problem area. Once any problem areas have been located and noted rich or lean, go into the Miscellaneous Modifiers menu and turn off the Closed Loop Fuel, exit, go to Fuel Modifiers, and then into Global Fuel. Now drive the vehicle and drive back to each problem area. When driving in a problem area, add or subtract fuel to obtain the smoothest operation at that driving point. Write down the quantity (plus or minus) of fuel required to achieve a smooth operation. When all the problem areas have been noted, and the amount of fuel required to achieve smooth operation has been noted at each problem area, you may now do each adjustment one at a time to achieve a complete tune up.

To input this information, you will need to make sure the Closed Loop Fuel is in the OFF position. Go to each area and enter the information. If you have found a problem that is not exactly in the center of one of the fuel cells, you will still be able to tune the area by using the Surround and Conquer method for properly managing the fuel curve. Listed below is an example of this method:

Assume that you have found a problem area at 2500 RPM and 15 inches of Vacuum. This is not an area where you can address the problem directly. In this scenario, we will say the unit is showing a lean condition (red light). In which case, fuel will need to be added. We will also say that when driving and using the Global Modifier to find the exact amount of fuel required, it was determined that the amount needed was plus ten percent (+10%). In the Surround and Conquer method, you will add fuel at the four locations surrounding the problem area. This is shown in the figure below:

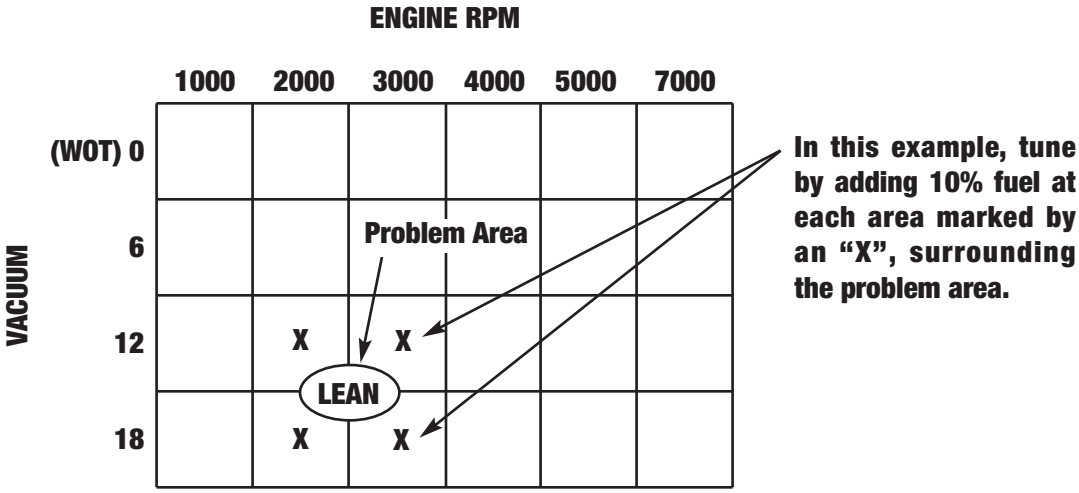

When the required amount of fuel has been added at each surrounding fuel cell, complete the operation by returning to the Miscellaneous Modifiers menus, and turning the Closed Loop Fuel ON. Press the SAVE key, then the ENTER key. The hand-held unit will show SAVING IN PROGRESS. Repeat this procedure at each problem area to complete the tune up.

©2008 Edelbrock Corporation

OPTIONAL PC TUNING FEATURE

To use the optional PC tuning feature, connect a DB9 serial extension cable to connector J25 of the main harness. Connect the other end to your PC's serial port as shown. Double click on the System Editor icon shown below.

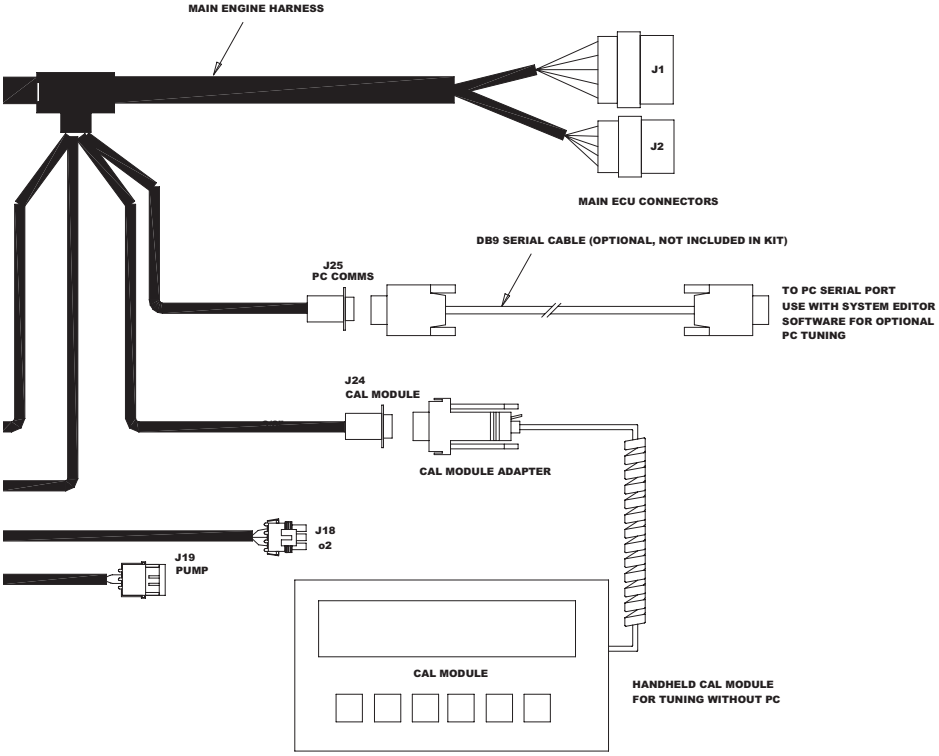

The engine controllers included in the Edelbrock Pro Flo system CANNOT be edited live using the System Editor software. In other words, System Editor can only be used to edit the calibration file loaded in the software. You cannot directly edit the calibration file loaded into the ECU. When you make changes to a calibration file, it must be saved and flashed into your ECU's memory before those changes take effect. For additional information on using System Editor to edit your calibration files, refer to the online help by selecting the Help menu at the top of the screen.

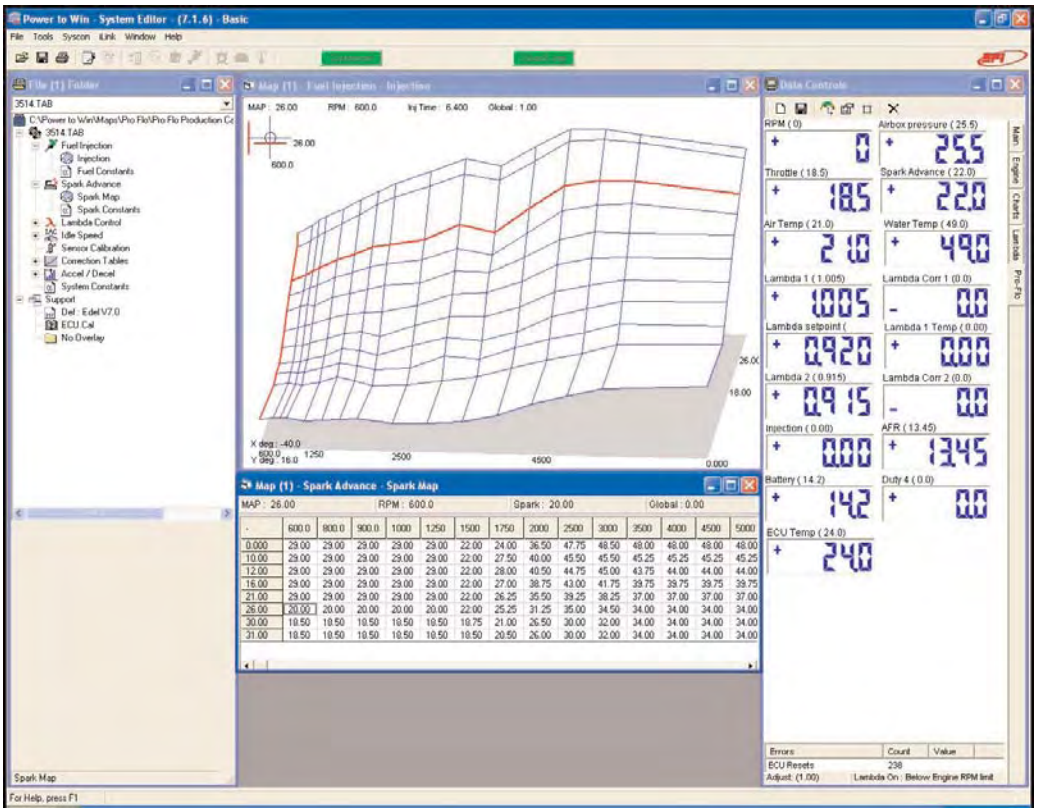

©2008 Edelbrock Corporation

CALIBRATION MODULE FLOWCHART

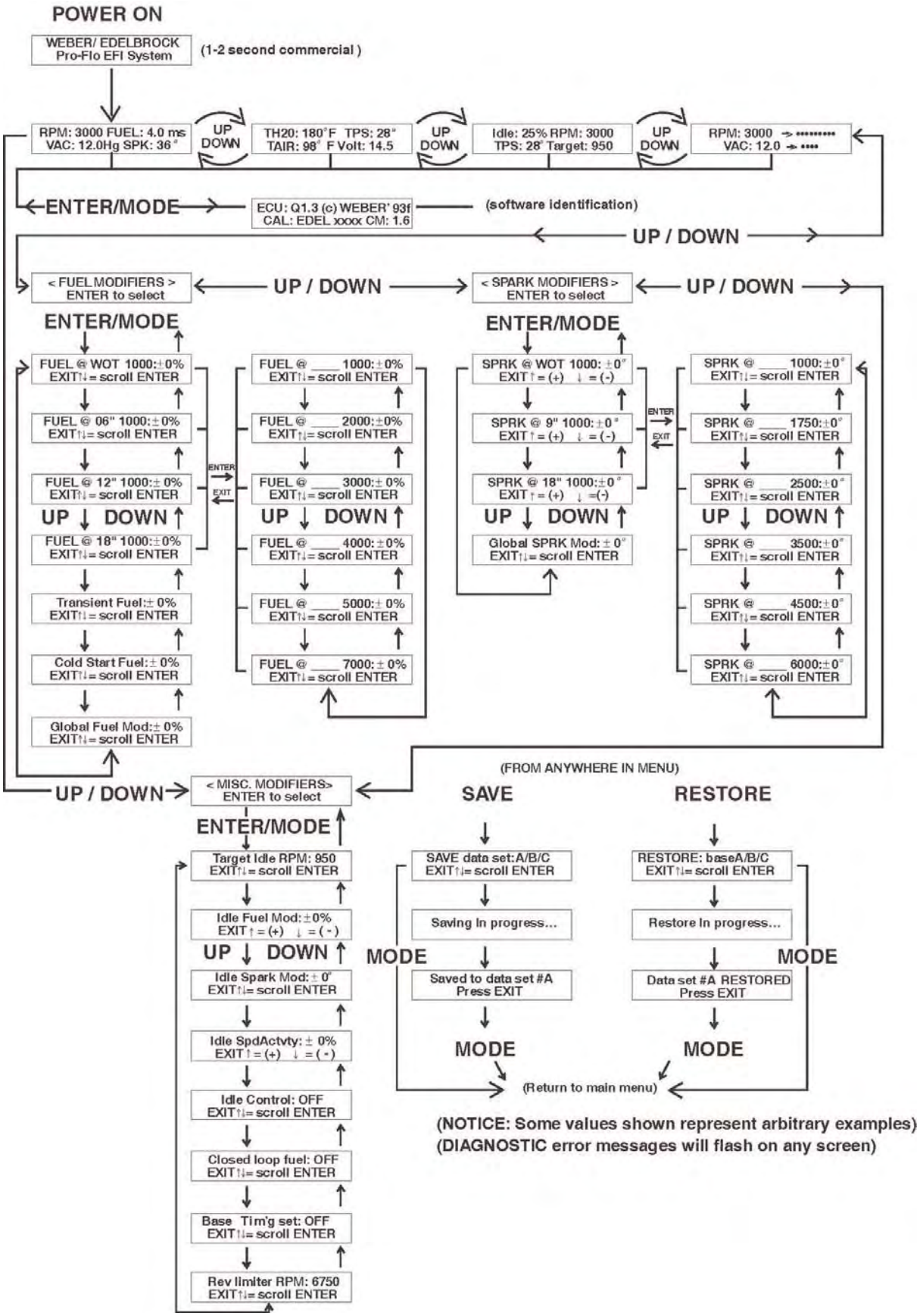

©2008 Edelbrock Corporation

PART NUMBERS

Many of the components of the Pro-Flo system are available separately. Many are standard OEM parts. In the event that one of these parts need to be replaced, you are likely to find a replacement at your local parts supplier, in addition to your local Edelbrock dealer or directly from Edelbrock.

Edelbrock Pro-Flo

Fuel Injection System.....Edelbrock #35260, #35080, #35090
ECU power relay/Fuel pump relay .....Edelbrock #3586
GM 14089936
Manifold Absolute Pressure sensor .....Edelbrock #3587
GM 16006835
Manifold Air Temperature sensor (Push-In) .....Edelbrock #3579
AC12160244
Coolant Temperature sensor.....Edelbrock #3589
GM 25036979
Throttle Position sensor .....Edelbrock #3590
Oxygen (O_2) sensor.....Edelbrock #3591
High pressure fuel pump.....Edelbrock #3594
Fuel filter .....Edelbrock #3596
GM 25055065
Fuel pressure regulator.....Edelbrock #3584
GM 17107010
Fuel injectors (set of eight).....Edelbrock #3853
Fuel injectors (one) .....Edelbrock #3583
Hall Effect Sensor .....Edelbrock #3517
Calibration Module.....Edelbrock #3519
Calibration Module Cord/Plug.....Edelbrock #3571
Idle air control solenoid.....Edelbrock #3599
Ford FOAE-9F715 B1A

©2008 Edelbrock Corporation

COMPLETE PRO-FLO SYSTEM PARTS

(1) Hall effect sensor
(1) Manifold Absolute Pressure sensor
(1) Manifold Air Temperature sensor
(1) Coolant Temperature sensor
(1) Throttle Position sensor
(1) Oxygen (O_2) sensor
(1) High pressure fuel pump
(1) Fuel filter
(1) Fuel pressure regulator
(8) Fuel injectors
(1) Idle Air Control solenoid
(1) Main system harness
(1) Fuel pump wire harness
(1) Mallory distributor
(12) Fuel line tie wraps
(1) Fuel pump relay
(1) 3 amp fuse
(1) 20 amp fuse
(1) 5-inch cross tube
(1) 2-inch cross tube
(1) Intake manifold
(1) Shutter wheel
(1) MAP Sensor bracket
(2) Fuel rail
(1) Return line O-ring tube
(1) Throttle body air valve
(4) Cross tube clamp
(1) Mechanical advance lockout plate
(1) Ignition Harness
(1) Software CD
(1) USB/Serial Converter
(8) Fuel filter clamp
(1) 5/16-inch hose to 1/4-inch pipe fitting
(1) 1/8-inch pipe to 1/4-inch hose fitting
(1) 1/4-inch pipe to 3/8-inch hose fitting
(1) Regulator/rail adapter
(1) Return line adapter
(2) 3/16-inch washer
(1) Air valve/manifold gasket
(8) 3/8-inch fuel line
(15) 11/32-inch PCV hose
(8) 5/16-inch rubber fuel line
(1) Pressure regulator shim
(2) Shutter wheel shims
(2) 10-32 nut
(4) 5/16 24 hex nut
(1) Wiring harness cover plate
(2) #10 internal star lock washer
(2) 1/4-inch pipe plug hex c/s dryseal
(2) 5mm x 25 hex head cap screw
(4) 5mm x 10 hex head cap screw
(1) 8-32 x 0.25 allen head screw
(2) 10-32 x 0.75 round head m/s screw
(1) 5mm x 0.8 x 30mm hex head m/s screw
(2) 10-32 x 1.50 Fillister head screw
(4) 5/16-18 x 1 socket head cap screw
(1) PCV valve
(1) Std. 1/4-inch Schrader valve
(5) Cross tube O-ring
(1) Regulator adapter tube
(4) 5/16-inch star washer internal
(2) O-ring
(4) 5/16 x 1/2 carb stud

©2008 Edelbrock Corporation

SERVICE

In the event that your Edelbrock Pro-Flo System should need servicing, return the unit pre-paid to the Edelbrock Service and Repair facility at 2700 California Street, Torrance, CA 90503. Do not attempt to disassemble or service the components of the Pro-Flo system yourself. Doing so may void the warranty.

WARRANTY

It is the constant endeavor of the Edelbrock Corp. to provide our customers with the highest quality performance products. Edelbrock warrants the Edelbrock Pro-Flo System to be free from defects in both workmanship and materials for a period of one year from date of purchase, provided that the product is properly installed and subjected to normal use and service, is not used for racing or competition purposes and that the product is not modified or altered in any way unless specified by our instructions. Our warranty service and repair facility is located at 2700 California Street, Torrance, CA 90503. Customers requiring warranty assistance should contact the dealer from whom they purchased the product. In turn, the dealer will contact Edelbrock, and we will determine the method of satisfying the warranty. Should Edelbrock determine that the product be returned to the factory, it should be accompanied by proof of purchase and a clear description of the exact problem. The product must be returned freight pre-paid. If a thorough inspection of the product by the factory indicates defects in workmanship or material, our sole obligation shall be to repair or replace the product. This warranty covers only the product itself and not the cost of installation or removal.

EDELBROCK CORP. SHALL NOT BE LIABLE FOR ANY AND ALL CONSEQUENTIAL DAMAGES OCCASIONED BY THE BREACH OF ANY WRITTEN OR IMPLIED WARRANTY PERTAINING TO THIS SALE, IN EXCESS OF THE PURCHASE PRICE OF THE PRODUCT SOLD.

If you have any questions regarding this product or installation, please contact our Technical Department from 8:00am-12:30; 1:30-5:00pm, Pacific Standard Time, Monday through Friday at:

Tech Telephone: (800) 416-8628
Fax: (310) 972-2730

Edelbrock Corporation
2700 California Street
Torrance, CA 90503

©2008 Edelbrock Corporation

Tech Telephone: (800) 416-8628
Tech Hours: 7am-5pm PST, Weekdays
Office Telephone: (310) 781-2222
E-Mail: efitech@edelbrock.com
Tech Fax: (310) 972-2730

Edelbrock Corp.
2700 California Street
Torrance, CA 90503