QUARTER MASTER INDUSTRIES, INC.

STEEL BELLHOUSING

INSTALLATION INSTRUCTIONS

Thank you for purchasing a Quarter Master bellhousing. Please take a few minutes to read through these instructions before you install your new Quarter Master Steel Bellhousing.

THINGS TO CHECK BEFORE YOU BEGIN:

- With the bellhousing bolted to the engine, check that the transmission mounting face of the bellhousing is parallel to the crankshaft face within .006" total indicated run-out. Clean block mounting surface, making sure that it is free from nicks, burrs, paint, etc. Refer to Figure 2.
- The transmission mounting hole of the bellhousing should be concentric to the crankshaft within .006" total indicated run-out. *The closer, the better*. Refer to Figure 2. If the measurement is not within specification, you will need to relocate the dowel pins in the engine block.
- Quarter Master bellhousings exceed both parallelism and concentricity requirements when new.

INSTALLATION:

- For installation on a Chevrolet engine with a flexplate and a button flywheel, a Quarter Master or OEM flexplate may be used.
- For installation on a Ford engine with a flexplate and a button flywheel, a Quarter Master 509322 flexplate must be used. The assembly of a stock flexplate will interfere with the bellhousing.
- If you are using a mid-plate on a Ford application, the starter will require a spacer. For stock starters, use either the Quarter Master 114371 starter spacer or the 114373 starter spacer. For a Quarter Master 114300 Ultra Duty Starter, use the 114373 starter spacer.
- For installation of a bellhousing on a Ford block, bolt the external engine mounts on the back of the bellhousing.
- Refer to your release bearing installation instructions for release bearing clearance.
- To mount the bellhousing and transmission, refer to Table 1 for bolt sizes and torque specifications.

1. Install the clutch and flywheel per manufacturer's instructions.
2. Set up release bearing clearance per manufacturer's instructions.
3. Set up starter clearance. Quarter Master recommends .100" +/- .040" pinion-to-ring gear clearance and .025" backlash (if adjustable).
4. Install the bellhousing. Refer to Table 1 for bolt size and torque.
5. Install the transmission. Refer to Table 1 for bolt size and torque.

Table 1: Recommended Bolt Sizes and Torques	Chevrolet	Ford
Bellhousing Bolt Size	3/8-16	7/16-14
Bellhousing Bolt Torque	25-30 ft-lbs	45-50 ft-lbs
Transmission Bolt Size	1/2-13	1/2-13*
Transmission Bolt Torque	70-75 ft-lbs	70-75 ft-lbs*

* Some Fords use 7/16-14 bolts, which would be torqued to 45-50 ft-lbs.

510 Telser Road • Lake Zurich, IL • 60047 • Ph: 847.540.8999 • Fax: 847.540.0526
www.racingclutches.com

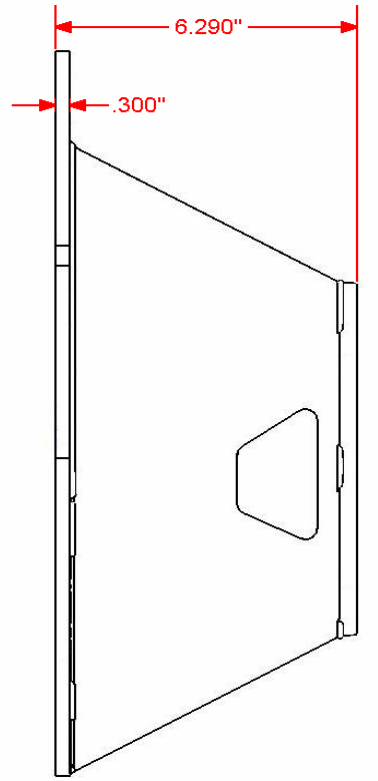

Figure 1: Side view of bellhousing

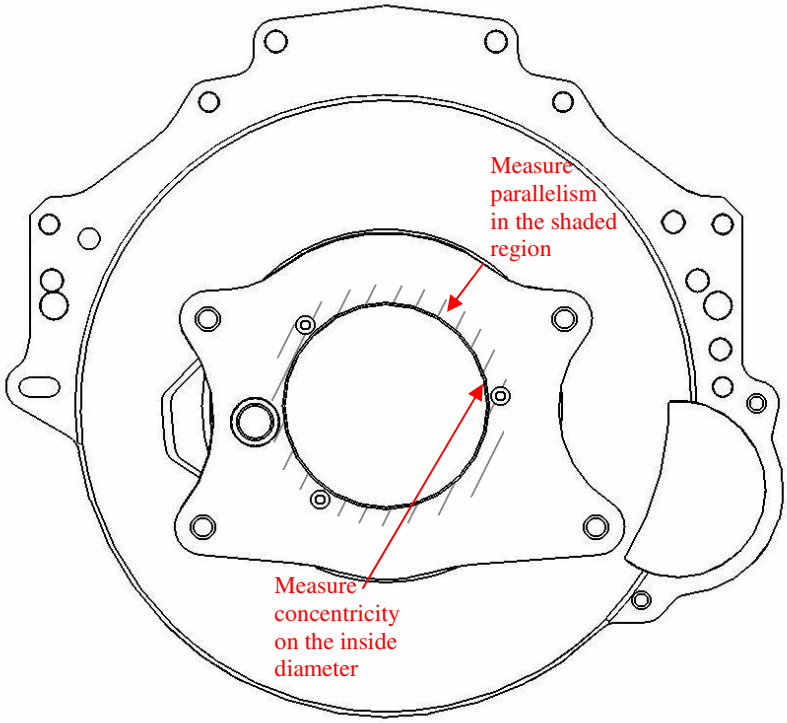

Figure 2: Back view of bellhousing

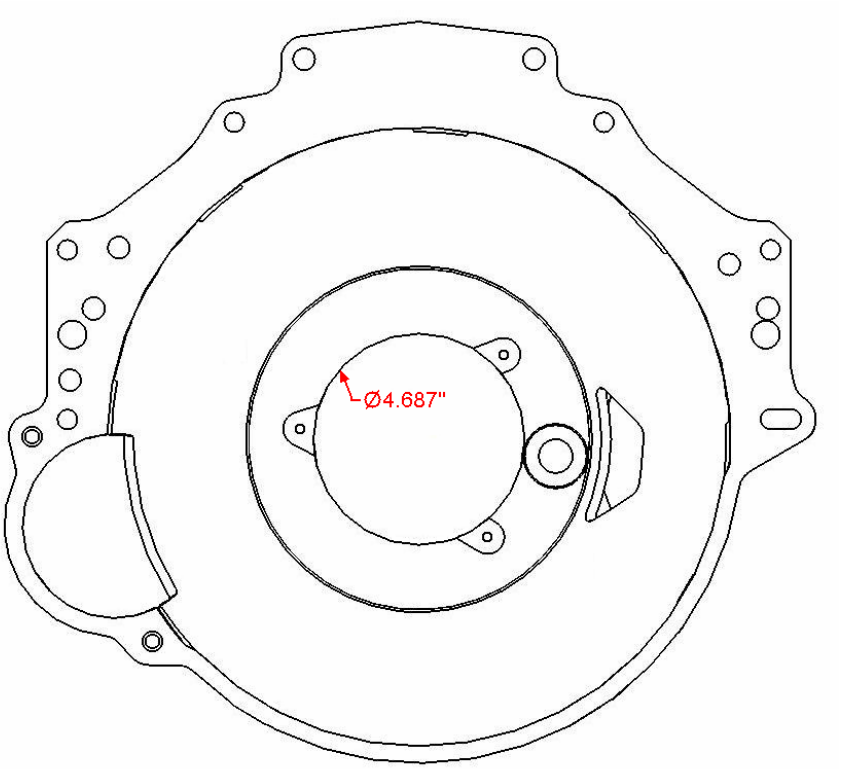

Figure 3: Front view of bellhousing

510 Telser Road • Lake Zurich, IL • 60047 • Ph: 847.540.8999 • Fax: 847.540.0526
www.racingclutches.com